(DRAFT) NIST Special Publication 800-152

A Profile for U. S. Federal Cryptographic Key Management Systems

Elaine Barker
Dennis Branstad
Miles Smid

C O M P U T E R S E C U R I T Y

National Institute of Standards and Technology
U.S. Department of Commerce

(DRAFT) NIST Special Publication 800-152

A Profile for U. S. Federal Cryptographic Key Management Systems

Elaine Barker
Computer Security Division
Information Technology Laboratory

Dennis Branstad
NIST Consultant
Austin, TX

Miles Smid
Orion Security Solutions
Silver Spring, MD

January, 2014

U.S. Department of Commerce
Penny Pritzker, Secretary

National Institute of Standards and Technology
Patrick D. Gallagher, Under Secretary of Commerce for Standards and Technology and Director

Authority

This publication has been developed by NIST to further its statutory responsibilities under the Federal Information Security Management Act (FISMA), Public Law (P.L.) 107-347. NIST is responsible for developing information-security standards and guidelines, including minimum requirements for Federal information systems, but such standards and guidelines shall not apply to national security systems without the express approval of appropriate Federal officials exercising policy authority over such systems. This guideline is consistent with the requirements of the Office of Management and Budget (OMB) Circular A-130, Section 8b(3), *Securing Agency Information Systems*, as analyzed in Circular A-130, Appendix IV: *Analysis of Key Sections*. Supplemental information is provided in Circular A-130, Appendix III, *Security of Federal Automated Information Resources*.

Nothing in this publication should be taken to contradict the standards and guidelines made mandatory and binding on Federal agencies by the Secretary of Commerce under statutory authority. Nor should these guidelines be interpreted as altering or superseding the existing authorities of the Secretary of Commerce, Director of the OMB, or any other Federal official. This publication may be used by nongovernmental organizations on a voluntary basis and is not subject to copyright in the United States. Attribution would, however, be appreciated by NIST.

National Institute of Standards and Technology Special Publication 800-152
Natl. Inst. Stand. Technol. Spec. Publ. 800-152, 143 pages (December 2013)
CODEN: NSPUE2

Certain commercial entities, equipment, or materials may be identified in this document in order to describe an experimental procedure or concept adequately. Such identification is not intended to imply recommendation or endorsement by NIST, nor is it intended to imply that the entities, materials, or equipment are necessarily the best available for the purpose.

There may be references in this publication to other publications currently under development by NIST in accordance with its assigned statutory responsibilities. The information in this publication, including concepts and methodologies, may be used by Federal agencies even before the completion of such companion publications. Thus, until each publication is completed, current requirements, guidelines, and procedures, where they exist, remain operative. For planning and transition purposes, Federal agencies may wish to closely follow the development of these new publications by NIST.

Organizations are encouraged to review all draft publications during public comment periods and provide feedback to NIST. All NIST Computer Security Division publications, other than the ones noted above, are available at http://csrc.nist.gov/publications.

Comments on this publication may be submitted to:

National Institute of Standards and Technology
Attn: Computer Security Division, Information Technology Laboratory
100 Bureau Drive (Mail Stop 8930) Gaithersburg, MD 20899-8930
Email: FederalCKMSProfile@nist.gov

Reports on Computer Systems Technology

The Information Technology Laboratory (ITL) at the National Institute of Standards and Technology (NIST) promotes the U.S. economy and public welfare by providing technical leadership for the Nation's measurement and standards infrastructure. ITL develops tests, test methods, reference data, proof-of-concept implementations, and technical analyses to advance the development and productive use of information technology. ITL's responsibilities include the development of management, administrative, technical, and physical standards and guidelines for the cost-effective security and privacy of other than national security-related information in Federal information systems. The Special Publication 800-series reports on ITL's research, guidelines, and outreach efforts in information system security, and its collaborative activities with industry, government, and academic organizations.

Abstract

This Profile for U. S. Federal Cryptographic Key Management Systems (FCKMSs) contains requirements for their design, implementation, procurement, installation, configuration, management, operation, and use by U. S. Federal organizations. The Profile is based on SP 800-130, *A Framework for Designing Cryptographic Key Management Systems (CKMS).*

KEY WORDS: access control; confidentiality; cryptographic key management system; key metadata; disaster recovery; integrity; security assessment; security policies; source authentication.

Acknowledgements

The National Institute of Standards and Technology (NIST) acknowledges and greatly appreciates contributions by all those who participated in the creation, review, and publication of this document. NIST also thanks the many public and private sector contributors whose constructive comments significantly improved its quality and usefulness. Many useful suggestions on Cryptographic Key Management that were made during the workshops held at NIST in 2009, 2010, and 2012 have been incorporated into this document.

Executive Summary

The NIST Cryptographic Key Management project covers major aspects of managing the cryptographic keys that protect sensitive, unclassified Federal information. Associated with each key is specific information (e.g., the identifier associated with its owner, its length, and acceptable uses) called metadata. The computers, software, modules, communications, and roles assumed by one or more authorized individuals when managing and using cryptographic key management services are collectively called a Cryptographic Key Management System (CKMS).

This Profile for U. S. Federal Cryptographic Key Management Systems (FCKMSs) has been prepared to assist CKMS designers and implementers in selecting the features to be provided in their "products," and to assist Federal organizations and their contractors when procuring, installing, configuring, operating, and using FCKMSs. Other organizations may use this Profile as desired.

An FCKMS can be owned and operated by a Federal organization or by a private contractor that provides key management services for Federal organizations or other contractors performing Federal information-processing services.

This Profile is based on NIST Special Publication 800-130, entitled "A Framework for Designing Cryptographic Key Management Systems." The Framework specifies topics that should be considered by a CKMS designer when selecting the capabilities that a CKMS will have and the cryptographic key management services it will support. This Profile replicates all of the Framework requirements that must be satisfied in a CKMS and its design documentation, and includes additional information about installing, configuring, operating and maintaining an FCKMS.

The Framework and this Profile could be used by other organizations that have security requirements similar to those specified in these documents or could be used as a model for the development of other profiles.

Tables of Contents and Figures

Contents

1. Introduction 10
1.1 Profile Terminology 11
1.2 Requirements, Augmentations and Features 12
1.3 Scope of this Profile 13
1.2 Audience 13
1.3 Organization 13
2. Profile Basics 14
2.1 Rationale for Cryptographic Key Management 14
2.2 Keys, Metadata, Trusted Associations, and Bindings 16
2.3 FCKMS Services 17
2.4 Profile Topics and Requirements 17
2.5 CKMS Design 17
2.6 FCKMS Profile 18
2.7 CKMS Framework and This Derived Profile 18
2.8 Differences between the Framework and This Profile 19
2.9 Example of a Distributed CKMS Supporting a Secure E-Mail Application 19
2.10 Modules, Devices, and Components 19
3. Federal CKMS Goals 21
3.1 Providing Key Management to Networks, Applications, and Users 21
3.2 Maximize the Use of COTS Products in an FCKMS 22
3.3 Conformance to Standards 22
3.4 Ease-of-use 23
3.4.1 Accommodate User Ability and Preferences 23
3.4.2 Design Principles of the User Interface 24
3.5 Performance and Scalability 25
4. Security Policies 26
4.1 Information Management Policy 26
4.2 Information Security Policy 27
4.3 CKMS and FCKMS Security Policies 27
4.4 Other Related Security Policies 31
4.4.1 Domain Security Policy 31
4.4.2 Computer Security Policy 33
4.4.3 FCKMS Module Security Policy 34
4.4.4 Cryptographic Module Security Policy 35
4.5 Interrelationships among Policies 35
4.6 Personal Accountability 35
4.7 Anonymity, Unlinkability, and Unobservability 36
4.7.1 Anonymity 36
4.7.2 Unlinkability 37
4.7.3 Unobservability 37

4.8 Laws, Rules, and Regulations 37
4.9 Security Domains 38
4.9.1 Conditions for Data Exchange 39
4.9.2 Assurance of Protection 39
4.9.3 Equivalence and Compatibility of Domain Security Policies 39
4.9.4 Third-Party Sharing 41
4.9.5 Multi-level Security Domains 41
4.9.6 Upgrading and Downgrading 42
4.9.7 Changing Domain Security Policies 42
5. Roles and Responsibilities 43
6. Cryptographic Algorithms, Keys, and Metadata 45
6.1 Cryptographic Algorithms and Keys 45
6.1.1 Key Types, Lengths and Strengths 45
6.1.2 Key Protections 46
6.1.3 Key Assurance 47
6.2 Key Metadata 47
6.2.1 Metadata Elements 47
6.2.2 Required Key and Metadata Information 51
6.3 Key Lifecycle States and Transitions 52
6.4 Key and Metadata Management Functions 53
6.4.1 Generate Key 54
6.4.2 Register Owner 55
6.4.3 Activate Key 55
6.4.4 Deactivate Key 56
6.4.5 Revoke a Key 56
6.4.6 Suspend and Re-Activate a Key 57
6.4.7 Renew a Public Key 58
6.4.8 Key Derivation or Key Update 58
6.4.9 Destroy a Key and Metadata 59
6.4.10 Associate a Key with its Metadata 59
6.4.11 Modify Metadata 60
6.4.12 Delete Metadata 61
6.4.13 List Key Metadata 61
6.4.14 Store Operational Key and Metadata 61
6.4.15 Backup of a Key and its Metadata 62
6.4.16 Archive Key and/or Metadata 62
6.4.17 Recover Key and/or Metadata 63
6.4.18 Establish a Key 64
6.4.19 Enter a Key and Associated Metadata into a Cryptographic Module 64
6.4.20 Output a Key and Associated Metadata from a Cryptographic Module 65
6.4.21 Validate Public-Key Domain Parameters 66
6.4.22 Validate Public Key 67
6.4.23 Validate Public Key Certification Path 67
6.4.24 Validate Symmetric Key 67
6.4.25 Validate Private Key (or Key Pair) 68

6.4.26 Validate the Possession of a Private Key 68
6.4.27 Perform a Cryptographic Function using the Key 68
6.4.28 Manage the Trust Anchor Store 68
6.5 Cryptographic Key and/or Metadata Security: In Storage 69
6.6 Cryptographic Key and Metadata Security: During Key Establishment 70
6.6.1 Key Transport 70
6.6.2 Key Agreement 71
6.6.3 Key Confirmation 71
6.6.4 Key Establishment Protocols 72
6.7 Restricting Access to Key and Metadata Management Functions 72
6.7.1 The Access Control System (ACS) 72
6.7.2 Restricting Cryptographic Module Entry and Output of Plaintext Keys 73
6.7.3 Controlling Human Input 74
6.7.4 Multiparty Control 74
6.7.5 Key Splitting 75
6.8 Compromise Recovery 75
6.8.1 Key Compromise 76
6.8.2 Metadata Compromise 77
6.8.3 Key and Metadata Revocation 78
6.8.4 Cryptographic Module Compromise 78
6.8.5 Computer System Compromise Recovery 79
6.8.6 Network Security Controls and Compromise Recovery 80
6.8.7 Personnel Security Compromise Recovery 82
6.8.8 Physical Security Compromise Recovery 84
7. Interoperability and Transitioning 85
7.1 Interoperability and Transitioning 85
8. Security Controls 90
8.1 Physical Security Controls 90
8.2 Operating System and Device Security Controls 91
8.2.1 Operating System Security 91
8.2.2 Individual CKMS Device Security 94
8.2.3 Malware Protection 95
8.2.4 Auditing and Remote Monitoring 97
8.3 Network Security Control Mechanisms 98
8.4 Cryptographic Module Controls 100
8.5 Federal CKMS Security-Controls Selection Process 101
9. Testing and System Assurances 103
9.1 CKMS Implementer Testing 103
9.2 Third-Party Testing 103
9.3 Interoperability Testing 104
9.4 Self-Testing 105
9.5 Scalability Testing 105
9.6 Functional and Security Testing 105
9.7 Environmental Testing 106
9.8 Development, Delivery, and Maintenance Assurances 107

9.8.1 Configuration Management 107
9.8.2 Secure Delivery 107
9.8.3 Development and Maintenance Environmental Security 108
9.8.4 Flaw Remediation Capabilities 109
9.8.5 Ease-of-Use Testing 110
10. Disaster Recovery 110
10.1 Facility Damage 111
10.2 Utility Service Outage 113
10.3 Communication and Computation Outage 114
10.4 FCKMS Hardware Failure 114
10.5 System Software Failure 115
10.6 Cryptographic Module Failure 117
10.7 Corruption of Keys and Metadata 117
11. Security Assessment 118
11.1 Full Security Assessment 119
11.1.1 Review of Third-Party Testing and Verification of Test Results 120
11.1.2 Architectural Review of System Design 121
11.1.3 Functional and Security Testing 121
11.1.4 Penetration Testing 122
11.2 Periodic Security Review 123
11.3 Incremental Security Assessment 123
11.4 Security Maintenance 124
12. Technological Challenges 125
12.1 Intellectual Property Rights 127
Appendix A: References 128
Appendix B: Glossary 131

1. Introduction

This *Profile for U.S. Federal Cryptographic Key Management Systems* (FCKMSs) specifies basic requirements for all FCKMSs. It is intended to assist CKMS designers and implementers to select and support appropriate security services and key-management functions, and to assist FCKMS [1] procurers, administrators, service-providing organizations, and service-using organizations to select appropriate CKMSs or CKMS services. This Profile specifies requirements for all organizations desiring to operate or use an FCKMS, either directly or under contract; makes recommendations for Federal organizations having special security needs and desiring to augment the base security and key management services; and suggests additional FCKMS features that may be desirable for Federal organizations to implement and use now or in the future.

This Profile is based on [SP 800-130], entitled "*A Framework for Designing Cryptographic Key Management Systems (CKMS)*," which provides a foundation for designing and implementing CKMSs. The Framework specifies requirements for designing any CKMS, commercial or Federal, while this Profile provides more-specific design requirements for an FCKMS, and includes additional requirements for testing, procuring, installing, managing, operating, maintaining, and using FCKMSs.

Any CKMS should include the computers, communications, software, modules, facilities, and the operational management roles that are assumed by individuals that protect, manage, and use cryptographic keys and certain associated information, herein called metadata. A CKMS includes anything that can access an unencrypted key and its metadata. Cryptographically protected keys and their associated metadata can be processed and stored by computers and transmitted through communications systems that are not considered as part of a CKMS.

A CKMS could be simple and integrated into a computer that is doing data processing for one user. It could also be very complex, consisting of multiple entities that support multiple networks of users in different countries having differing security requirements.

This Profile is intended to:

1. Assist CKMS designers and implementers in supporting appropriate security algorithms, cryptographic key types, key metadata, and protocols for protecting sensitive U.S. Federal computing applications and data;
2. Establish requirements for FCKMS testing, procurement, installation, configuration, administration, operation, maintenance and usage;

[1] A CKMS is intended to be the system designed and built by a CKMS designer and implementer, while an FCKMS is the system used by the Federal government, possibly after configuring the CKMS to be compliant with its needs.

3. Facilitate an easy comparison of one CKMS with another by analyzing their designs and implementations in order to understand how each meets the Framework and Profile requirements; and
4. Assist in understanding what is needed to evaluate, procure, install, configure, administer, operate, and use an FCKMS that manages the cryptographic keys that protect sensitive and valuable data obtained, processed, stored, and used by U.S. Federal organizations and their contractors.

Designing a secure CKMS is the responsibility of CKMS designers, who must choose among various key-management capabilities to be included in a product being designed for a particular market. Purchasing an acceptable FCKMS or FCKMS service is the responsibility of Federal procurement officials and their technical associates. Managing/administering an FCKMS is the responsibility of appropriate FCKMS service providers when installing, configuring, operating, and maintaining an FCKMS.

This Profile is based on the Framework, and readers of this Profile are strongly encouraged to be familiar with the information in the Framework. The Framework contains tutorial information that may be needed to understand the cryptographic key management topics of this Profile, but is often not repeated herein. This Profile introduces each topic that is also covered in the Framework.

The Framework and this Profile could be used by other organizations that have security requirements similar to those specified in these documents or could be used as a model for the development of other profiles.

1.1 Profile Terminology

The Profile often uses terminology that is not used in the Framework. A glossary of terms is provided in Appendix B, but some of the more general terms merit an introduction below.

"CKMS" is used to mean any Cryptographic Key Management System or product that satisfies the requirements of the Framework. The term refers to the system that is designed and implemented, possibly with configurable options.

"FCKMS" is used to mean the CKMS that is used by the Federal government, possibly after configuring a CKMS offering to meet the needs of an FCKMS service-using organization. The FCKMS meets all the requirements of this Profile and is owned by, or provides FCKMS services for, a U.S. Federal organization and/or its contractors.

This Profile uses the terms "FCKMS service-providing organization" and "FCKMS service-using organization" (or "FCKMS service-provider" and "FCKMS service-user"). An FCKMS service-provider may be a part of an FCKMS service-using organization or may be an independent organization providing the services required by service-users (e.g., under contract). Federal CKMS service-providers may be Federal organizations,

Federal contractors, or both. This Profile includes requirements for both FCKMS service-providers and service-users.

This Profile uses the term "impact level" to refer to the information-system impact levels in [FIPS 200]. FIPS 200 uses the security categories in FIPS 199 to specify and define three information-system impact levels: Low, Moderate and High. The security categories in FIPS 199 are based on the potential impact on an organization if certain events occur that jeopardize the information and information systems needed by the organization to accomplish its assigned mission, protect its assets, fulfill its legal responsibilities, maintain its day-to-day functions, and protect individuals.

The term "FIPS-140 security level" refers to the security levels defined for cryptographic modules in [FIPS 140]. Four levels are defined, where a level 1 cryptographic module provides the least amount of protection, and a level 4 provides the greatest amount of protection. The cryptographic modules and their implemented FIPS-140 security levels are validated by NIST's Cryptographic Module Validation Program (CMVP).

The term "security strength" is used to measure the amount of cryptographic protection that can be provided by a combination of a cryptographic algorithm and a key. Further discussion of key strengths is provided in [SP 800-57-Part 1].

In CKMS topic discussions, statements of fact are indicated by "is" or "are"; statements of permission or of probability are indicated by "may"; statements of capability are indicated by "can". Statements including "could" are used in discussing possible optional or alternative actions.

1.2 Requirements, Augmentations and Features

All Framework requirements (**FR**s) in [SP 800-130] are provided in this Profile in the appropriate section to provide context.

This document also specifies FCKMS requirements, recommended augmentations, and suggested features. Only the properties that are considered as necessary in all FCKMSs are identified as requirements.

Profile requirements for all FCKMSs are indicated by "**shall**" or "**shall not**," and are numbered beginning with a "**PR**" designation. Recommended augmentations are indicated by "**should**," and are numbered beginning with a "**PA**" designation. Suggested features are indicated by "**could**," and are numbered beginning with a "**PF**" designation. All Profile requirements (i.e., **PR**s) are mandatory for FCKMSs, but recommended augmentations and suggested features are optional. Federal CKMS service-using organizations could selectively require that their FCKMSs support some of the recommended augmentations or suggested features. In order to easily recognize Profile requirements, augmentations and features from the surrounding text, each type is presented in a separate table, with column one providing the PR, PA or PF number;

column two left blank for future use as an indication of who is responsible for the PR, PA or PF; and column three providing the text of the requirement, augmentation or feature.

The first Framework requirement and Profile requirement, recommended augmentation and suggested feature are concerned with the overall conformance to the Framework and Profile.

FR:1.1 A conformant CKMS design **shall** meet all **"shall"** requirements of the Framework**.**

PR:1.1.		A Federal CKMS **shall** satisfy all Framework requirements (**FR's**) and Profile requirements (**PR**s).

PA:1.1.		A Federal CKMS **should** support Profile augmentations (**PA**s) that are specified by one or more of its FCKMS-using organizations.

PF:1.1.		A Federal CKMS **could** support Profile features (**PF**s) that are specified by one or more of its FCKMS-using organizations.

1.3 Scope of this Profile

An FCKMS should be used to manage all the cryptographic keys that are used to protect a user's information, all other keys needed by the FCKMS, and all the metadata associated with each of these keys.

While individual people are outside the scope of an FCKMS, certain roles (e.g., administrators, manager, operators, auditors, and users) that are assigned to, and assumed by, one or more individuals are within the scope of an FCKMS. Physical and logical interfaces between an FCKMS and any or all of these roles are within its scope.

1.2 Audience

This Profile is intended to be used by CKMS designers and implementers, and FCKMS procurers, installers, configuration personnel, administrators, managers, operators, and users.

Federal employees and Federal contractors are the anticipated users of the services provided by a Federal CKMS. Members of the public sector could be authorized to use the services of a Federal CKMS when interacting with Federal organizations and their contractors.

1.3 Organization

Section 1, Introduction, introduces Cryptographic Key Management, CKMSs, FCKMSs, and the Profile.

Section 2, Profile Basics, covers the fundamentals of the Profile and an FCKMS.

Section 3, Goals, defines the goals of an FCKMS.

Section 4, Security Policies, presents the need for and the scope of one or more policies governing the management and use of an FCKMS.

Section 5, Roles and Responsibilities, describes various roles and responsibilities of the people managing, operating, and using an FCKMS.

Section 6, Cryptographic Keys and Metadata, discusses cryptographic algorithms, keys and metadata, various key management services, security issues, and error/damage recovery mechanisms.

Section 7, Interoperability and Transitioning, considers the interoperability of FCKMSs and their ability to satisfy future key management needs.

Section 8, Security Controls, describes the security controls used to protect an FCKMS.

Section 9, Testing and System Assurances, describes security testing and obtaining assurances that security services are being performed correctly.

Section 10, Disaster Recovery, discusses various FCKMS service and data backup capabilities and recovering from several types of disasters.

Section 11, Security Assessment, discusses assessing the operation and security of an FCKMS.

Section 12, Technology Challenges, discusses the concern with technical advances that could affect the security of an FCKMS.

Appendix A, References, provides relevant information for accessing each publication referenced herein.

Appendix B, Glossary, provides a glossary of terms used in this Profile.

2. Profile Basics

This Profile provides a structured view of a Federal CKMS, discussing security provisions that shall, should or could be used by a Federal organization or contractor to manage and protect cryptographic keys and metadata.

2.1 Rationale for Cryptographic Key Management

Today's information systems require protection against denial of authorized use of their services; unauthorized access to, or modification of, their information processing

capabilities; and unauthorized destruction of their equipment and facilities. The information systems themselves must also protect the information that they contain from unauthorized disclosure, modification, and destruction.

Cryptography is the only means for protecting data during transmission when physical protection is cost-prohibitive or impossible to provide. Thus, cryptography is widely used when business is conducted or sensitive information is transmitted over a network. Cryptography also provides excellent protection for stored data against entities that are not authorized to obtain or modify the data.

Cryptographic protection for data requires algorithms designed specifically for that purpose. These algorithms often require the use of cryptographic keys, which are managed by an FCKMS. The combination of the cryptographic algorithms and keys of an appropriate length can be used to provide a level of protection for data; this level is commonly referred to as the security strength (see [SP 800-57-Part1] for additional information).

Cryptographic-based security requires the secure management of keys throughout their lifetime. Cryptography can reduce the scope of information management from protecting large amounts of information to protecting a key and its associated metadata (i.e., information about the key). This Profile specifies requirements for the management of the keys used to protect sensitive Federal information and the metadata associated with those keys.

FR:2.1. The CKMS design **shall** specify all cryptographic algorithms and supported key sizes for each algorithm used by the system.

FR:2.2. The CKMS design **shall** specify the estimated security strength of each cryptographic technique that is employed to protect keys and their bound metadata.

PR:2.1.		A Federal CKMS **shall** support NIST-approved cryptographic algorithms, schemes and modes of operation in accordance with [SP 800-131A].
PR:2.2.		In a Federal CKMS, information rated at a Low impact level **shall** be protected with cryptographic algorithms and keys that provide at least 112 bits of security strength.
PR:2.3.		In a Federal CKMS, information rated at a Moderate impact level **shall** be protected with cryptographic algorithms and keys that provide at least 128 bits of security strength.
PR:2.4.		In a Federal CKMS, information rated at a High impact level **shall** be protected with cryptographic algorithms and keys that provide at least 192 bits of security strength.

2.2 Keys, Metadata, Trusted Associations, and Bindings

Cryptographic keys are used when applying cryptographic protection on information[2] or processing already-protected information[3]. All keys require integrity protection that should be verified before a key is used. Secret and private keys also require confidentiality protection. Before a key is used, the source of the key should be authenticated.

Information about a cryptographic key that specifies its characteristics, acceptable uses, and applicable parameters must be associated, and stored, with the key. This information is called the key's metadata, and each descriptive item is called a metadata element. A key and its metadata should be logically or cryptographically linked together and then protected, either cryptographically or physically. These operations are discussed in more detail later in this Profile.

A metadata element for a key could be implicitly known by the FCKMS, but is often explicitly associated and stored with the key. Some metadata elements are sensitive to unauthorized disclosure and, therefore, require confidentiality protection. Like keys, metadata needs protection against unauthorized modification, and the source should be authenticated before the metadata is used. The amount of protection provided to a key and its metadata should be commensurate with the FIPS 199 security category and FIPS 200 information-system impact level of the data being protected by that key and its metadata.

Keys are considered as being either static or ephemeral. Static keys are typically used multiple times and are considered as being "long-term" keys. Ephemeral keys are usually generated when needed and used only once; they are considered to be "short-term" keys.

A trusted association must be established between each static key and its metadata when they are created by the FCKMS, and this association should be maintained throughout the lifetime of the key. A trusted association can be established by a cryptographic binding between a key and its metadata (e.g., a digital signature computed on a key and its metadata), or by a trusted process (e.g., a face-to-face handover of metadata from an entity who is known and trusted). An FCKMS should provide cryptographic binding and verification functions that are used in the key and metadata distribution and management processes.

PR:2.5.		A Federal CKMS **shall** support establishing and maintaining a trusted association between a static key and its metadata.

[2] For example, encrypting plaintext information to protect its confidentiality, or signing the information to protect its integrity and verify its source.

[3] For example, decrypting ciphertext to obtain the original plaintext or verifying a signature to assure its continued integrity.

PA:2.1.		A Federal CKMS **should** support cryptographic binding between a key and its metadata.

2.3 FCKMS Services

An FCKMS provides key management services for the cryptographic-based security of user applications, such as secure data communication and storage. These services include the generation, distribution and destruction of cryptographic keys and their associated metadata.

2.4 Profile Topics and Requirements

The CKMS Framework covers the topics for which **FR**s were established that must be satisfied when designing any CKMS. Profile requirements, augmentations and features that may cover topics not addressed in the Framework, are placed on the designer/implementer, FCKMS service-providing organization or FCKMS service-using organization.

Profile requirements, recommendations, or suggested features are included in most sections following an overview of the topic. Most Profile topics are similar or identical to those presented in the Framework, but in some cases, additional topics have been included. Profile requirements often clarify or augment Framework requirements or address areas not covered in the Framework.

All Framework requirements in [SP 800-130] are provided in this Profile in the appropriate section to provide context, usually followed by any requirement, augmentation or feature relevant to those Framework requirements, plus any additional recommendations, augmentations or features that are appropriate for the topic. In some cases, Framework requirements appear without recommendations, augmentations or features; in a few cases, recommendations, augmentations or features are provided in sections without a Framework requirement, e.g., when a topic not included in the Framework is under discussion.

2.5 CKMS Design

In accordance with the Framework, any CKMS design should describe how it can be implemented to provide cryptographic keys to the entities that will use those keys to protect sensitive data. The CKMS design documentation should specify all acceptable uses of each key type, where and how keys can be generated, how they can be protected in storage and during delivery, and the types of entities to whom they can be delivered.

FR: 2.3 A compliant CKMS design **shall** describe design selections and provide documentation as required by the requirements of this Framework.

FR:2.4 The CKMS design **shall** specify a high-level overview of the CKMS system that includes:

a) The use of each key type,

b) Where and how the keys are generated,
c) The metadata elements that are used in a trusted association with each key type,
d) How keys and/or metadata are protected in storage at each entity where they reside,
e) How keys and/or metadata are protected during distribution, and
f) The types of entities to which keys and/or metadata can be delivered (e.g., user, user device, network device).

PR:2.6.		A Federal CKMS **shall** support assuring the availability of critical cryptographic keys and their associated metadata in an FCKMS that provides reliable and available key management services.
PR:2.7.		A Federal CKMS **shall** be implemented in accordance with the CKMS design that is specified in the CKMS design documentation and support all the specified services, functions, and features of the design.
PR:2.8.		A Federal CKMS compliance document **shall** be created prior to the initial operation of an FCKMS, describing how each Profile requirement is satisfied and how each augmentation and/or feature is selected.

PA:2.2.		The availability of critical processing capabilities **should** be supported by a Federal CKMS.

2.6 FCKMS Profile

A CKMS Profile provides the requirements that a qualifying CKMS, its implementation, and its operation must meet for a particular sector of interest, such as the Federal government. A CKMS Profile specifies how the CKMS must be designed, implemented, tested, evaluated, and operated. A CKMS Profile is a set of requirements concerning security and interoperability requirements that must be satisfied by a CKMS as implemented in an operational system.

This FCKMS Profile (i.e., SP 800-152]) specifies requirements, augmentations, and features for the U.S. Federal government that will allow a CKMS designer and implementer to create a CKMS that can be used by the Federal government, and includes topics that will be useful by the FCKMS service-providers and FCKMS service-users.

2.7 CKMS Framework and This Derived Profile

In the Framework, this section discusses the relationship between the Framework and a profile of the Framework. SP 800-152 is such a profile that has been developed for the Federal government.

2.8 Differences between the Framework and This Profile

In the Framework, this section discusses the differences between a Framework and a profile of that Framework. Essentially, the Framework requires that specific topics be addressed during the design of a CKMS, and described in design documentation. Any CKMS complies with the Framework if its design documentation satisfies all the Framework Requirements. A profile states the specific requirements that must be met in order to have a satisfactory CKMS for the designated using sector. This Profile (i.e., SP 800-152) imposes specific design and implementation requirements on a CKMS that can be used as an FCKMS, and provides additional requirements for testing, procurement, installation, configuration, administration, operation, maintenance and use.

2.9 Example of a Distributed CKMS Supporting a Secure E-Mail Application

In the Framework, this section provides a useful example of a secure email application.

2.10 Modules, Devices, and Components

An FCKMS can be physically described as a set of computers, communications, software, modules, devices, and components that are designed to establish, manage, and protect cryptographic keys and metadata. However, an FCKMS, once procured, installed, configured, initialized, and operating, includes installation facilities, support services (e.g., electricity, HVAC, water, offices for personnel) and a number of management and user roles involving people performing specific actions on, for, or with the FCKMS.

An FCKMS performs the key and metadata functions that are the foundation of all cryptographic key-management services needed by one or more Federal service-using organizations, their employees, and the key-management service users.

As shown in Figure 1, an FCKMS includes one or more computers, each with an FCKMS module that interacts with the FCKMS modules in other computers, often using a means of communication that requires cryptographic protection. An FCKMS module is the hardware and/or software that can interact with identical or compatible FCKMS modules located wherever keys and their metadata are required. Note that the FCKMS module may be a logical entity, rather than a physical one. Each FCKMS module is associated with a cryptographic module. The cryptographic module could contain the FCKMS module, or the FCKMS module could contain the cryptographic module, or they could be viewed as being separate entities. A cryptographic module is the hardware and/or software that performs the actual cryptographic operations, e.g., encryption, decryption and generating a digital. Each FCKMS module must have access to a cryptographic module.

An FCKMS device is a physical, often “stand alone”, hardware component providing or supporting key-management services. A component denotes an individual hardware, software, and/or firmware item in a module or device.

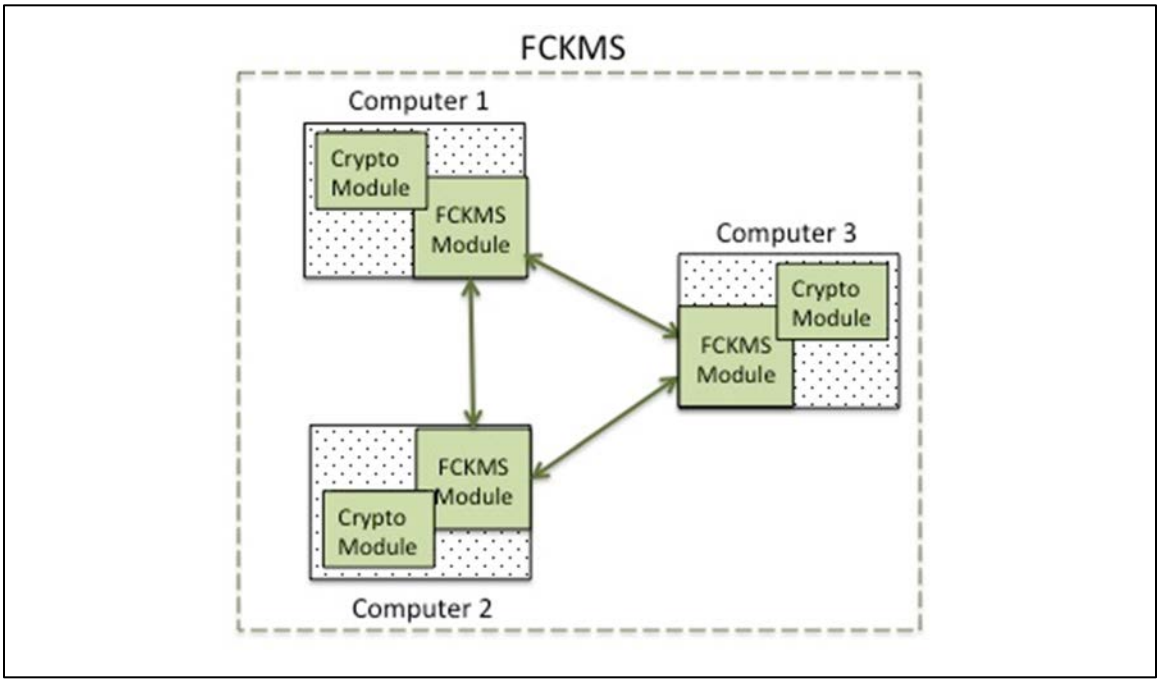

Figure 1: FCKMS and its FCKMS Modules.

The cryptographic modules used in an FCKMS must be FIPS 140-validated at an appropriate FIPS 140 security level for the impact level associated with the information that the keys will protect, as specified in the following requirements. A higher FIPS 140 security level than the minimum level is acceptable.

In the case of a Low impact level, the cryptographic module must (at a minimum) provide the protections available at FIPS 140 security level 2. This can be obtained by employing a cryptographic module that has been validated at 2 or higher, or at security level 1 if the FCKMS provides physical-security protection that compensate for the level 2 physical-security requirements not included in the module, such as locks or tamper-evidence features, operating system controls, and delivery and operation.

FR:2.5 The CKMS design **shall** specify all major devices of the CKMS (e.g., the make, model, and version).

PR:2.9.		A Federal CKMS **shall** use FIPS 140-validated cryptographic modules.
PR:2.10.		For the protection of keys and metadata used to protect data at the Low impact level, a Federal CKMS **shall** employ cryptographic modules validated at FIPS 140 security level 2 or higher, or at security level 1 if the FCKMS provides compensating physical security protection.

PR:2.11.		For the protection of keys and metadata used to protect data at the Moderate impact level, a Federal CKMS **shall** employ cryptographic modules validated at FIPS 140 security level 3 or higher.
PR:2.12.		For the protection of keys and metadata used to protect data at the High impact level, a Federal CKMS **shall** employ cryptographic modules validated at FIPS 140 security level 4.

PA:2.3.		A Federal CKMS **should** assure that all its cryptographic modules are protected against invasive and non-invasive attacks.

3. Federal CKMS Goals

A Federal CKMS should achieve specific goals and satisfy specific requirements that are specified in the security policies of one or more Federal organizations. The typical primary security goal of an organization is to protect its information at a level commensurate with its value, sensitivity, and perceived risks. Three information-system impact levels are defined in [FIPS 200]: Low, Moderate, and High. Federal organizations are required to establish the appropriate impact levels for the various categories of information processed, stored, and transmitted within Federal information systems, based on the potential adverse impact to organizational operations, assets, or individuals if such information is lost or compromised.

Cryptographic algorithms and keys used to protect information (including other keys) can provide various levels of protection, depending on factors that include the choice of algorithm, the length of the key and the method for generating the key. These levels are commonly called security strengths, which are measured in bits. Selecting a cryptographic algorithm with a specific key length provides a known security strength if implemented, managed, and used properly. This Profile provides guidance on the minimum security strengths to be provided by cryptographic functions and the minimum FIPS-140 cryptographic module security levels to be used for each impact level.

3.1 Providing Key Management to Networks, Applications, and Users

The information-processing network in which an FCKMS operates is also typically used as the communications backbone of both the user's applications and the FCKMS. Network characteristics, such as error properties, could influence the selection of the cryptographic algorithms and cryptographic modes of operation, because some modes of operation extend communication errors and make the decrypted communication unintelligible. Other modes can minimize the effects of a communication error.

An FCKMS could provide key management services for a single organization, application, or user or for many of each. An FCKMS designed for a single application could be integrated into that application, while an FCKMS supporting many applications

and/or users in geographically distributed locations could be distributed to wherever key management services are needed and require communication networks to provide interaction between the distributed applications and users.

A goal for the FCKMS is to use a set of security mechanisms that function well together, provide a desired level of security that meets the needs of the application(s) and FCKMS-service-using organization(s), is affordable, and has a minimum negative impact on operations.

FR:3.1 The CKMS design **shall** specify its goals with respect to the communications networks on which it will function.

FR:3.2 The CKMS design **shall** specify the intended applications that it will support.

FR:3.3 The CKMS design **shall** list the intended number of users and the responsibilities that the CKMS places on those users.

3.2 Maximize the Use of COTS Products in an FCKMS

Commercial Off-The-Shelf (COTS) products that are designed and produced for many customers are typically less costly to acquire, operate, and maintain than custom products that have been designed for one customer. A CKMS that satisfies a wide range of requirements is often a goal of CKMS designers, FCKMS service providers and FCKMS service users because of its reduced cost, wider market acceptance, and greater interoperability among FCKMSs. A COTS CKMS could be configurable to meet the special needs of any customer and, therefore, be widely accepted in the marketplace.

FR:3.4 The CKMS design **shall** specify the COTS products used in the CKMS.

FR:3.5 The CKMS design **shall** specify which security functions are performed by COTS products.

FR:3.6 The CKMS design **shall** specify how COTS products are configured and augmented to meet the CKMS goal.

3.3 Conformance to Standards

An FCKMS that conforms to widely accepted security standards often increases confidence in its capability of providing the desired protection, since it benefits from the wisdom that went into developing the standards. If the standards have validation programs that measure compliance and those validations are obtained, there is increased confidence that the FCKMS has implemented that standard correctly. The use of standards also fosters interoperability when different FCKMSs need to interoperate.

Tests can be created and used to assess the conformance of an FCKMS with the appropriate standards. An FCKMS that has been validated as conforming to the appropriate standards is generally more desirable[4] than one that has not.

FR:3.7 The CKMS design **shall** specify the Federal, national, and international standards that are utilized by the CKMS.

FR:3.8 For each standard utilized by the CKMS, the CKMS design shall specify which CKMS devices implement the standard.

FR:3.9 For each standard utilized by the CKMS, the CKMS design **shall** specify how conformance to the standard was validated (e.g., by a third party testing program).

PR:3.1.		A Federal CKMS **shall** specify the Federal Information Processing Standards (FIPS) and NIST Special Publications (SPs) to which the FCKMS conforms.

PF:3.1.		A Federal CKMS **could** conform to selected specifications of Industrial, National, and International standards for security and interoperability of the FCKMS.

3.4 Ease-of-use

Ease-of-use is very subjective. Something easy for one person to do may not be easy for another. An FCKMS should be easy to use by both untrained and experienced users. For example, the FCKMS could assist untrained users by performing the required actions automatically, but provide an interface for experienced users to select and use acceptable alternative actions. Negative user experiences could affect the acceptability and use of a security service or product. A Federal CKMS should be designed to support a range of user expertise and experience.

3.4.1 Accommodate User Ability and Preferences

An FCKMS should accommodate differences in user abilities and preferences when managing their keys and metadata. Differences generally include user knowledge, experience, task familiarity, and motivation. Preferences often vary between user control versus system control.

An FCKMS could provide fully automated security services to a user or an application, based on the organizational policy. It could provide a combination of automated security

[4] Standards and conformance tests vary greatly. A security standard often establishes a metric for, or a minimum level of, security. An interoperability standard often establishes rules for independent implementations of the standard to work together. A good-practice standard often establishes rules for achieving the same level of performance by two or more parties.

services and those selected and controlled by a user or application. An FCKMS should support user control, based on organizational policy and user desires, and provide one or more security service-control interfaces for its users and managers.

FR:3.10 The CKMS design **shall** specify all user interfaces to the system.

FR:3.11 The CKMS design **shall** specify the results of any user-acceptance tests that have been performed regarding the ease of using the proposed user interfaces.

PA:3.1.		A Federal CKMS **should** support user interfaces that: a) Require minimal user interactions with the FCKMS, b) Are commensurate with the range of experience and capability of its expected users; c) Support a user when providing an identifier and identity verification, d) Support a user initiating and controlling the generation and protection of cryptographic keys and associated metadata, and e) Provide one or more security service-control interfaces.

PF:3.2.		A Federal CKMS **could** provide fully automatic services to a user or an application, based on organizational policy.

3.4.2 Design Principles of the User Interface

Ease-of-use design goals should assure that:

a) It is intuitive and easy to do the right thing,
b) It is not easy to do the wrong thing, and
c) It is intuitive and easy to recover when a wrong thing is done.

FR:3.12 The CKMS design **shall** specify the design principles of the user interface.

FR:3.13 The CKMS design **shall** specify all human error-prevention or failsafe features designed into the system.

PA:3.2.		A Federal CKMS **should** support control interfaces designed to support all roles selected by its FCKMS service-using organizations and assure that: a) It is intuitive to initiate and easy to perform all supported key management service control interactions with the FCKMS (e.g., to select and invoke a key management function); b) It is difficult to make an error or cause a security breach when initiating or interacting with an FCKMS service

		and c) It is easy to recover from an FCKMS service initiation or control error.
PA:3.3.		A Federal CKMS **should** support user interfaces that assist the user in selecting and using appropriate security functions and services for the key management services that they require.

PF:3.3.		A Federal CKMS **could** support user-to-FCKMS and FCKMS-to-FCKMS interfaces that use the same (e.g., standard) commands, parameters, and formats for initiating and controlling key management services.

3.5 Performance and Scalability

Performance and scalability should be considered when designing a CKMS. The performance of an FCKMS will generally depend on factors that include 1) the number and type of service-using organizations, 2) the sensitive applications and number of users being supported, 3) the communications capabilities and geographical distribution among the distributed components of the FCKMS, and 4) the capabilities of the computers, modules, and devices comprising it. The scalability of an FCKMS depends on such factors as the flexibility of the underlying CKMS design and implementation to support increasing service demands, and the ability to replace or upgrade its components and software.

FR:3.14 The CKMS design **shall** specify the performance characteristics of the CKMS, including the average and peak workloads that can be handled for the types of functions and transactions implemented, and the response times for the types of functions and transactions under those respective workloads.

FR:3.15 The CKMS design **shall** specify the techniques that are supported and can be used to scale the system to increased workload demands.

FR:3.16 The CKMS design s**hall** specify the extent to which the CKMS can be scaled to meet increased workload demands. This **shall** be expressed in terms of additional workload, response times for the workload, and cost.

PR:3.2.		A Federal CKMS **shall** be scalable to support increasing numbers of FCKMS-service users and their computers, communications, and sensitive applications.
PR:3.3.		A Federal CKMS-using organization **shall** identify the maximum number of users, FKCMS modules, and applications to be supported by its FCKMS and its associated

		communication mechanisms.

4. Security Policies

An organization often creates and supports layered security policies, with high-level policies addressing the management of its information and lower-level policies specifying the rules for protecting the information.

An organization could have different policies covering different applications or categories of information. For example, a Federal organization could have one set of policies covering its financial information and a different set of policies covering its personnel information.

This section describes a layered set of policies, including an Information Management Policy, an Information Security Policy, and an FCKMS Security Policy.

4.1 Information Management Policy

An organization's Information Management Policy governs the collection, processing, and use of an organization's information, and should specify what information is to be collected or created, and how it is to be managed. An organization's management establishes this policy using industry standards of good practices, legal requirements regarding the organization's information, and organizational goals that must be achieved using the information that the organization will be collecting and creating.

These specifications are the foundation of an Information Security Policy (see Section 4.2) and dictate the levels of confidentiality, integrity, availability, and source-authentication protections that must be provided for each category of sensitive and valuable information covered by the Information Management Policy.

PR:4.1.		A Federal CKMS service-using organization **shall** create an Information Management Policy that: a) Specifies the information to be collected or created and how it is to be managed, b) Specifies the high-level goals for obtaining and using the information, c) Specifies the organizational management roles and responsibilities for the policy and establishes the authorization required for people performing these information-management duties, d) Specifies what information is to be considered valuable and sensitive, and how it is to be protected, e) Specifies what categories of information need to be protected against unauthorized disclosure, modification or destruction, and f) Establishes the rules for authorizing one or more people

		to create policy and manage its implementation and use.

4.2 Information Security Policy

An organization's Information Security Policy is created to support and enforce portions of the organization's Information Management Policy by specifying in more detail what information is to be protected from anticipated threats and how that protection is to be attained.

The Information Security Policy should be used to create an FCKMS Security Policy (see Section 4.3).

PR:4.2.		A Federal CKMS using-organization **shall** create an Information Security Policy that is consistent with the organization's Information Management Policy and specifies: a) The categories of information that are considered sensitive, b) The impact level associated with the sensitive information, c) The current, anticipated, and potential threats to the information, d) How the necessary protection is to be obtained, and e) The rules for collecting, protecting and distributing the sensitive information.

4.3 CKMS and FCKMS Security Policies

This Profile is based on the assumption that a CKMS designer will either build a product that supports the specific policies of its known potential customers or one that is comprehensive and flexible enough to be configured to satisfy different security policies for a large number of future customers. The most comprehensive security policy that can be supported by the capabilities of a CKMS is called its CKMS Security Policy.

A CKMS Security Policy is created by a CKMS designer to specify the methods used in the CKMS design to create, use and protect the cryptographic keys and metadata used by the CKMS and any restrictions associated with their use. The protections should cover the entire key lifecycle, including when they are operational, stored, and transported. A CKMS Security Policy includes an identification of all cryptographic mechanisms and cryptographic protocols that can be used by the CKMS.

The designer's CKMS Security Policy and design may allow the selection of sub-policies (e.g., by an FCKMS service provider) that can be configured from the CKMS Security Policy to be compliant with the higher-level policies of an FCKMS-using organization. A CKMS Security Policy is, therefore, the broadest set of sub-policies for protecting keys and metadata that a CKMS can support.

An FCKMS Security Policy is intended to support the Information Security Policy of the FCKS service-using organization by specifying the rules for managing the cryptographic keys and metadata used to protect the information. It may be identical to the CKMS Security Policy of the CKMS designer or may be a configured subset of the designer's CKMS Security Policy. See Figure 2 for an example.

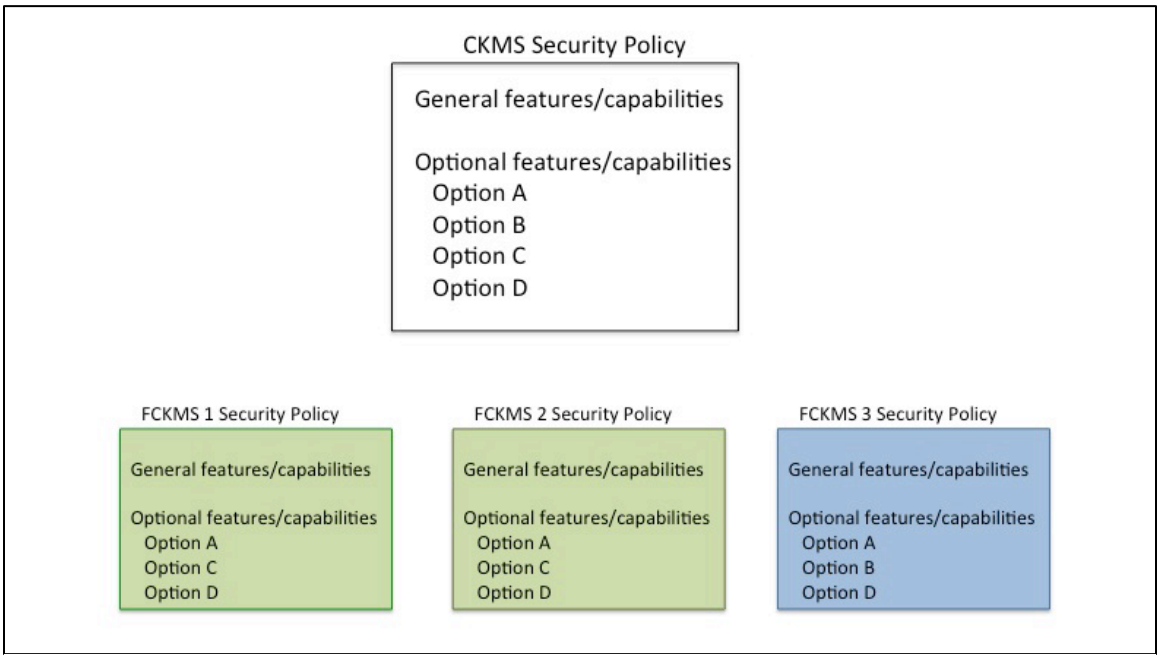

Figure 2: CKMS Security Policy and Possible FCKMS Sub-Policies

Figure 2 depicts a CKMS Security Policy (in the white box) with general features and capabilities, as well as optional features/capabilities that can be selected or prohibited to create a sub-policy appropriate for a specific FCKMS service provider. The colored boxes show FCKMS Security Policies that could be selected. FCKMS 1 and FCKMS 2 have been configured with identical sub-policies (shown in green as FCKMS Security Polices 1 and 2); these FCKMSs specify security policies that require the features/capabilities shown as options A, C and D. For FCKMS 3, options A, B, and D are selected for the FCKMS Security Policy.

A Federal CKMS service-using organization must use an FCKMS that supports a security policy that is consistent with (or can be configured to be consistent with) its higher-level policies (e.g., its Information Management Policy and Information Security Policy). A Federal organization that is considering the procurement of a CKMS or the services of a CKMS provider should review the security policy of each candidate CKMS and verify that it can support the organization's higher-level policies before making a selection. An appropriate sub-policy of the CKMS Security Policy, called the FCKMS Security Policy, should then be created that is consistent with the organization's higher-level policies. The FCKMS Security Policy should specify the rules that can assure the availability,

confidentiality, and integrity of the organization's cryptographic keys and bound metadata that will be used to protect the sensitive information to be protected by the FCKMS. An FCKMS service-using organization should verify that its security policies are consistent with, and can be supported, by, an FCKMS service provider, both administratively and technically.

The FCKMS Security Policy should specify how protection can be provided throughout the lifecycle of each type of key and its associated metadata, including when they are stored, being transported, or being used.

A Federal organization may have different Information Security Policies covering different applications or categories of information (e.g., the policies may be different for classified information than for personnel information). Each Information Security Policy may require a different FCKMS Security Policy.

An FCKMS should assist in supporting and adopting its security policies and implementation rules by providing tutorials to new managers and users on how its services should be managed and used. If a user can select and initiate security services for an application or category of information, then the FCKMS should assist in selecting appropriate security services by informing the user about the rules and how the rules can and should be followed.

FR:4.1 The CKMS design **shall** specify the CKMS Security Policy, including the configurable options and sub-policies that it is designed to enforce.

FR:4.2 The CKMS design **shall** specify how the CKMS Security Policy is to be enforced by the CKMS (e.g., the mechanisms used to provide the protection required by the policy).

FR:4.3 The CKMS design **shall** specify how any automated portions of the CKMS Security Policy are expressed in an unambiguous tabular form or a formal language (e.g., XML or ASN.1), such that an automated security system (e.g., table driven or syntax-directed software mechanisms) in the CKMS can enforce them.

PR:4.3.		A Federal CKMS **shall** support the higher-level security policies of one or more service-using organizations.
PR:4.4.		A Federal CKMS **shall** make its FCKMS Security Policy available to all its FCKMS service-using organizations and their authorized users.
PR:4.5.		A Federal CKMS **shall** support its own FCKMS Security Policy for its own data (e.g., keys, metadata), services, and functions.

PA:4.1.		A Federal CKMS **should** support an FCKMS Security Policy that specifies the following: a) The names of the organization(s) adopting the policy, b) Who (person, title or role) is authorized to approve/modify the policy, c) The identifiers of entities (users or devices) that should support the policy, d) The impact levels of information that are specified in and controlled by the policy, e) The primary data and key/metadata protection services (i.e., data confidentiality, data integrity, source authentication) that are to be provided by the FCKMS, f) The personnel security services (e.g., personal accountability, personal privacy, availability, anonymity, unlinkability, unobservability) that can be supported by the FCKMS, g) The metadata that specify the sensitivity or handling restrictions of the keys and their metadata, h) The algorithms and all associated parameters to be used for each impact level and with each protection service, i) The maximum lifetime of keys and metadata that can be assured for each cryptographic algorithm used, j) The acceptable methods of user and source authentication for each information impact level to be protected by a key and its associated metadata, k) The backup, archiving and recovery requirements for keys and metadata at each information impact level, l) The roles to be supported by the FCKMS, m) The physical security requirements for the FCKMS's keys and metadata for each impact level, n) The means and rules for recovering keys and metadata, and o) The communication protocols to be used when protecting sensitive data, keys, and metadata.
PA:4.2.		A Federal CKMS **should** educate its users and managers about the security policies relevant to the FCKMS and the use of the FCKMS in accordance with those policies.

A security policy should be written so that the people responsible for managing and using the policy can understand the goals of the policy and can follow its implementation rules. A security policy could be encoded in an electronic form (e.g., a policy specification formal language, table of security rules, computer program) such that an FCKMS could automatically support and enforce parts of the policy. Automated security policy support

systems could be programmed to detect security problems and resolve them in accordance with the policy.

Security policy specifications can be described in a formal language that can be used to explicitly define the syntax (i.e., acceptable sentences) of an organization's policy such that a computer program can recognize and follow the rules of the policy. These rules could be called the semantics (i.e., acceptable meaning) of each sentence of the language. The semantics of a key management language sentence define the functions to be performed on keys by an FCKMS. If a security policy is encoded correctly, a Federal CKMS could support and enforce it.

PF:4.1.		A Federal CKMS **could** support its administrators in assessing a security policy for completeness and enforceability.
PF:4.2.		A Federal CKMS Security Policy **could** be specified in a table, a computer program, or a policy specification language.

4.4 Other Related Security Policies

An FCKMS Security Policy could include or rely on other security policies or provisions, such as a Domain Security Policy, a Computer Security Policy, an FCKMS Module Security Policy and a Cryptographic Module Security Policy.

FR:4.4 The CKMS design **shall** specify other related security policies that support the CKMS Security Policy.

PA:4.3.		Federal CKMS service-using organizations **should** coordinate with their service-providing organization in defining and supporting security policies for providing key management services for their users.

4.4.1 Domain Security Policy

A security domain is a collection of entities (i.e., FCKMS modules), including their FCKMSs, that support the same security policy − known as the Domain Security Policy. See Section 4.9 for more information about security domains. The Domain Security Policy should be derived from the Information Management and Security policies of all organizations working together in the security domain. All entities that constitute a security domain are responsible for being aware of and following the Domain Security Policy. All FCKMSs in the domain are responsible for protecting the keys and associated metadata used to cryptographically protect data in accordance with the Domain Security Policy.

An FCKMS may be capable of supporting multiple Domain Security Policies. If this is the case, then the keys and metadata used in one domain must be separated from those

used in another domain, unless an equivalence of Domain Security Policies is determined and there is a need to share keys and metadata between the domains. The FCKMS Security Policy must reflect the existence of the multiple domains and the rules for sharing keys and metadata among them.

Alternatively, a security domain may consist of one or more FCKMSs. In this case, the Domain Security Policy and the FCKMS Security Policies of the FCKMSs need to be consistent.

PA:4.4.		A Federal CKMS **should** support one or more Domain Security Policies that specify the following: a) The names of the organization(s) adopting the policy, b) Who (person, title or role) is authorized to approve or modify the policy, c) The identifiers of entities (users or devices) that are capable of supporting and should support the policy, d) The impact levels of information that are specified in and controlled by the policy, e) The primary data and key/metadata protection services (i.e., data confidentiality, data integrity, source authentication) that are to be provided by the FCKMS, f) The personnel security services (e.g., personal accountability, personal privacy, availability, anonymity, unlinkability, unobservability) specified in each Domain Security Policy that can be supported by the FCKMS, g) The metadata to be provided that specifies the impact level or handling restrictions of keys and their metadata, h) The algorithms and all associated parameters to be used for each impact level and with each protection service, i) The maximum lifetime of the keys and metadata that can be assured for each cryptographic algorithm, j) The acceptable methods of user and source authentication for each information impact level, k) The backup and archiving requirements for keys and metadata at each impact level, l) The domain roles to be supported by the FCKMS, m) The physical security requirements for the FCKMS's keys and metadata for each impact level, n) The means supported for recovering keys and metadata, and m) The communication protocols to be used when protecting sensitive data, keys, and metadata.

PA:4.5.		A Federal CKMS **should** support all Domain Security Policies of its service-using organizations that are subsets of its FCKMS Security Policy**.**

PF:4.3.		A Federal CKMS that supports multiple domain security policies **could** support an automated security policy syntax analyzer[5] that will accept formal security policy specifications for handling various key types and their metadata, and then create a computer program that enforces the semantic rules of the policy.
PF:4.4.		A Federal CKMS **could** support one or more Domain Security Policies that are specified as a table, computer program, or in a formal language that defines the syntax and semantics of the policy specifications and implementation rules.

4.4.2 Computer Security Policy

A Computer Security Policy specifies how an organization's information is to be protected while being processed and stored in its computer systems. The Computer Security Policy should be based on and support the organization's Information Security Policy.

PA:4.6.		A Federal CKMS service provider **should** have a computer security policy.
PA:4.7.		A FCKMS-using organization **should** create a Computer Security Policy that identifies: a) The information that is processed, communicated, and stored within its computer systems that requires protection, b) The threats that are to be protected against, and c) The detailed rules for protecting the information by computers, communication systems, and computer users.
PA:4.8.		A Federal CKMS **should** use and support applications using computer operating systems that provide security in accordance with the FCKMS service-using organization's Computer Security Policy.

[5] The syntax of a language is specification of the acceptable structures of all the sentences of the language. The semantics of a language are the meanings of all its acceptable sentences.

4.4.3 FCKMS Module Security Policy

As shown in Figure 1 of Section 2.10, an FCKMS consists of one or more computers containing an FCKMS module, with an associated cryptographic module. The computer could, in fact, have more than one FCKMS module and more than one cryptographic module. Each FCKMS module is designed to interact with one or more FCKMSs, and perhaps with one or more security domains.

Each FCKMS module must have its own FCKMS Module Security Policy, which may or may not be the same as other FCKMS modules with which it interacts. For example, when the FCKMS Module is used in an FCKMS designed to accommodate a master-slave relationship among its members, then the FCKMS Module Security Policy of the master may be different than the FCKMS Module Security Policies of the slaves.

Figure 3 depicts an example of an FCKMS module that can interact with two FCKMSs: CKMS 1 and CKMS 2. The FCKMS Module Security Policy must accommodate the FCKMSs and domains in which the FCKMS module operates, i.e., by including the appropriate provisions of each FCKMS Security Policy and each Domain Security Policy in its own FCKMS Module Security Policy. When interacting with more than one FCKMS or domain, the cryptographic module must be capable of maintaining a separation of the keys and metadata between the FCKMSs and domains.

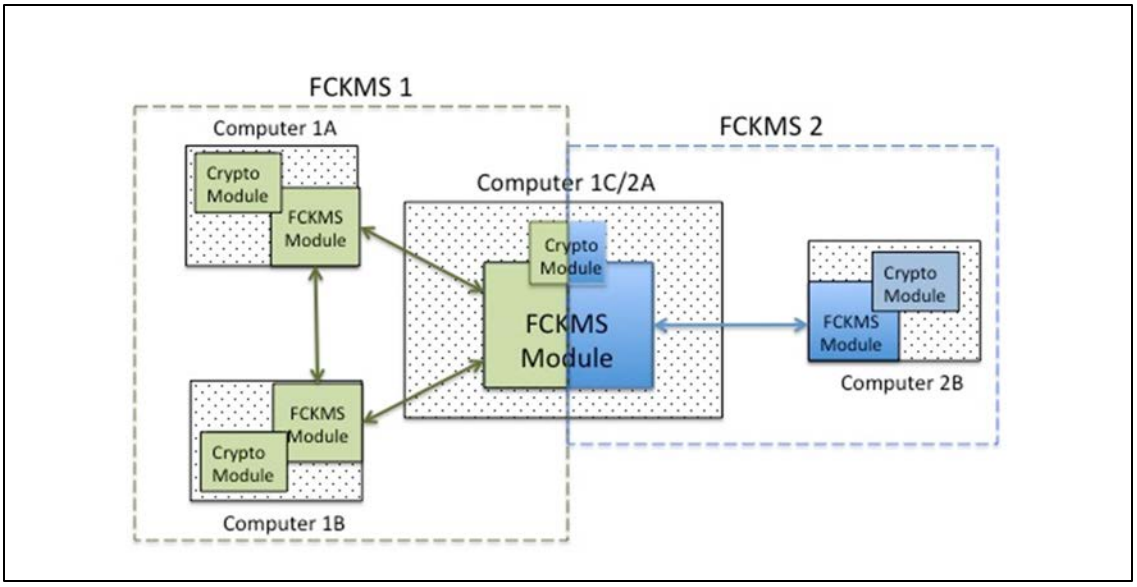

Figure 3: FCKMS Module in Multiple FCKMSs

PR:4.6.		An FCKMS module **shall** have an FCKMS Module Security Policy that: a) Specifies the FCKMS Security Policies and Domain Security Policies that it accommodates, b) Specifies the rules for separating keys and metadata between FCKMSs and security domains.

PR:4.7.		An FCKMS module that interacts with multiple FCKMSs or security domains **shall** use a cryptographic module that supports the separation of keys and metadata of one FCKMS or security domain from another FCKMS or security domain.

4.4.4 Cryptographic Module Security Policy

A cryptographic module security policy is a statement of the rules that the cryptographic module will follow when performing cryptographic functions (e.g., key generation and signature verification). The cryptographic module security policy specifies the mechanisms to be used to maintain the security of the module and to protect sensitive data, including secret and private plaintext keys and sensitive metadata. The cryptographic module security policy includes specifications for controlling access to the keys and metadata, the physical security provided to protect the module's storage and processing capabilities, and the mitigation of other attacks specified in the policy. See [FIPS 140] for further information.

4.5 Interrelationships among Policies

The Information Management Policy, Information Security Policy, Computer and Communications Security Policies, FCKMS Module Security Policy, and Cryptographic Module Security Policy typically form a top-down layered set of policies in which a lower-layer policy supports the policy/policies at the higher layers. For example, an Information Management Policy for protecting certain categories of information from unauthorized disclosure may result in an Information Security Policy for encrypting data before being transmitted or stored. This Policy may dictate a Domain Security Policy specifying the use of symmetric encryption/decryption using a specific algorithm and key length. The Cryptographic Module Security Policy would describe how the keys will be protected while in a Cryptographic Module.

FR:4.5 The CKMS design **shall** specify the policies that are supported by the CKMS design and a summary of how they are supported by the design.

PR:4.8.		A Federal CKMS **shall** document the relationship between its policies.

4.6 Personal Accountability

A policy of personal accountability requires that every person who accesses sensitive information be held accountable for his or her actions. Personal accountability may be a requirement in an Information Management Policy that needs to be accommodated by specific features in the FCKMS for the management of keys and metadata, such as an access control system that requires users to authenticate themselves before granting access to an FCKMS capability.

An FCKMS that supports a Personal Accountability Policy needs to be able to correctly identify each person accessing and using the FCKMS, determine who is authorized to

access controlled items, grant access only upon verification of the authorization, and detect and report any attempts for unauthorized access.

FR:4.6 The CKMS design **shall** specify if and how personal accountability is supported by the CKMS.

PA:4.9.		A Federal CKMS **should** be capable of: a) Identifying entities (e.g., devices and users), b) Verifying entity access authorization, c) Detecting requests for unauthorized access, d) Reporting requests for unauthorized access, and e) Restricting the use of an FCKMS to authorized entities performing authorized activities.
PA:4.10.		A Federal CKMS **should** detect attempts to bypass personal accountability policy and report each offense to the FCKMS management.

4.7 Anonymity, Unlinkability, and Unobservability

An Information Security Policy could state that certain users or categories of users of a secure information-processing system must be assured of anonymity, unlinkability, and/or unobservability. Anonymity assures that specific information cannot be related to its owner. Unlinkability assures that two or more related events in an information-processing system cannot be related to each other. Unobservability assures that an observer is unable to identify or infer the identities of the parties involved in a transaction.

FR:4.7 The CKMS design **shall** specify the anonymity, unlinkability, and unobservability policies that can be supported by the CKMS**.**

4.7.1 Anonymity

An FCKMS often requires information about the identity of entities participating in FCKMS transactions (e.g., to determine the keys to be used); an entity assuming the audit role may also require this information. However, an FCKMS could protect the anonymity of the entities that participate in FCKMS transactions from entities outside the FCKMS and from entities assuming non-audit roles within the FCKMS.

FR:4.8 The CKMS design **shall** specify which CKMS transactions have or can be provided with anonymity protection**.**

FR: 4.9 The CKMS design **shall** specify how CKMS transaction anonymity is achieved when anonymity assurance is provided.

PF:4.5.		A Federal CKMS **could** assure that a key owner's true

		identity cannot be determined by anyone other than an entity assuming the audit role.

4.7.2 Unlinkability

An FCKMS may need to link FCKMS transactions together, e.g., a transaction that requests the generation of a key, and another that uses it; an entity assuming the audit role may also require this information. However, an FCKMS could provide unlinkability protection of FCKMS transactions such that entities cannot be linked to initiating or participating in an FCKMS transaction when viewed from outside the FCKMS or by entities assuming non-audit roles within the FCKMS that are not involved with in those transactions.

FR:4.10 The CKMS design **shall** specify which CKMS transactions have or can be provided with unlinkability protection.

FR:4.11 The CKMS design **shall** specify how CKMS transaction unlinkability is achieved**.**

PF:4.6.		A Federal CKMS **could** assure that no one outside an FCKMS or entities within the FCKMS that assume non-audit roles can link several transactions with each other or their initiator.

4.7.3 Unobservability

An FCKMS could protect transactions from being observed (i.e., monitored, recorded) and protect the identities of the entities that initiate or participate in the transactions.

FR:4.12 The CKMS design **shall** specify which CKMS transactions have or can be provided with unobservability protection.

FR:4.13 The CKMS design **shall** specify how CKMS transaction unobservability is achieved**.**

PF:4.7.		A Federal CKMS **could** assure that any key management service is not observable by anyone except authorized parties.

4.8 Laws, Rules, and Regulations

The security policies of an organization should conform to the laws, rules, and regulations of the locality, state, and nation(s) in which its FCKMS will be used. If an FCKMS is designed for international use, then it should be flexible enough to conform to the restrictions of multiple nations.

FR: 4.14 The CKMS design **shall** specify the countries and/or regions of countries where it is intended for use and any legal restrictions that the CKMS is intended to enforce.

PR:4.9.		A Federal CKMS **shall** support U.S. Federal laws, rules and regulations.

PA:4.11.		A Federal CKMS **should** support the rules and regulations of the countries in which it is operating and providing key management services.

PF:4.8.		A Federal CKMS **could be** configurable to support the policies of one or more national and international organizations.

4.9 Security Domains

A security domain is a collection of entities (i.e., FCKMS modules), including their FCKMSs, that support the same security policy − known as the Domain Security Policy (see Section 4.4.1). When two mutually trusting entities are operating in the same security domain, the entities can exchange keys and metadata while providing the protections that are required by the Domain Security Policy.

Security domains can be useful when managing an organization's users and computers that can connect to users and computers in other organizations. If different organizations are in the same Security Domain, sharing information securely is relatively easy. If they are in different Security Domains, then the sharing of information becomes difficult or even impossible.

When two entities are in different security domains, they may not be able to provide equivalent protection to the exchanged keys and metadata because they are operating under different Domain Security Policies. However, there are circumstances in which an entity in one domain can send keys and metadata to another entity in a different domain, even though their policies are not identical.

Before information is shared between entities in two or more Security Domains, their Domain Security Policies must be carefully examined before exchanging or combining their information. The Domain Security Policy Authorities for the domains intending to share information should verify that different Domain Security Policies provide acceptable protection for each other's data. Computers could verify the equivalence or compatibility of two or more Domain Security Policies if they are encoded to enable such verification.

A security domain could be defined for a single information impact level (e.g., Low) or could be defined as having multiple impact levels (e.g., Low and Moderate). The

computer systems that are processing multiple levels of sensitive information must be designed, programmed, and operated to separate and protect the processing of information at the different impact levels.

PA:4.12.		A Federal CKMS **should** be capable of enforcing at least one Domain Security Policy.

4.9.1 Conditions for Data Exchange

Both the entity intending to send sensitive data to another entity in a different domain, and the intended receiving entity, should satisfy the following conditions:

a) Have an acceptable means of sending and receiving the information (i.e., the communications channel),
b) Have interoperable cryptographic capabilities (e.g., identical encryption/decryption algorithms that utilize identical key lengths),
c) Have acceptable Domain Security Policies for exchanging information and
d) Trust each other to enforce their Domain Security Policies.

If two entities belong to the same security domain, it is likely that these conditions can be met. If the entities do not belong to the same security domain, then these conditions are less likely to be satisfied. See Section 4.9.2 of the Framework for additional information.

FR:4.15 The CKMS design **shall** specify design features that allow for the exchange of keys and metadata with entities in other security domains that are considered to offer equivalent but different security protections.

4.9.2 Assurance of Protection

Protection assurances within security domains include protecting a key and/or metadata from unauthorized disclosure and unauthorized modification, as well as verifying the source and destination of a key and/or metadata.

FR:4.16 The CKMS design **shall** specify the source and destination authentication policies that it enforces when sharing a key and/or metadata with entities in differing security domains.

FR:4.17 The CKMS design **shall** specify the confidentiality and integrity policies that it enforces when sharing a key and/or metadata with entities in differing security domains**.**

FR:4.18 The CKMS design **shall** specify what assurances it requires when communicating with entities from other security domains.

4.9.3 Equivalence and Compatibility of Domain Security Policies

When entities in different security domains need to share or mix data, their respective security policies must be compatible or equivalent.

Two security domains have equivalent security policies if the authority responsible for each security domain agrees to accept the other domain's policy as being equivalent to its own policy in terms of the security protections provided. If it is determined that the policies of two domain policies are equivalent, then an entity in one security domain may share data with an entity in another equivalent domain.

Two Security Domains are compatible if they can exchange a key and its metadata without violating (or altering) either domain's security policy. For example, if the two compatible policies use the same cryptographic algorithm and key length for encrypting information, have the same impact level and there are no restrictions against sharing information, then an entity in one security domain could share data with an entity in another domain, but only the data that is covered by this "intersection" of the two policies.

FR:4.19 The CKMS design **shall** specify if and how it supports the review and verification of another domain's security before intra-domain communications are permitted.

FR:4.20 The CKMS design **shall** specify how it detects, prevents or warns an entity of the possible security consequences of communicating with an entity in a security domain with weaker policies.

PF:4.9.		A Federal CKMS **could** support the authorities from different security domains in reviewing each other's Domain Security Policies and verifying their equivalence or compatibility.
PF:4.10.		A Federal CKMS **could** support key management services for the sharing of sensitive data among two or more domains whose security policies have been verified as being equivalent or compatible.
PF:4.11.		A Federal CKMS **could** support protocols that obtain a Domain Security Policy from a different security domain, compare the security required and provided by the policies, and establish that the security provided is equivalent or compatible.
PF:4.12.		The domain authorities of Federal CKMSs **could** negotiate a new Domain Security Policy from two existing Domain Security Policies and enforce the new policy using the following actions: a) Obtain a copy of each original policy, b) Verify that the two original Federal Domain Security Policies are equivalent or compatible, c) Create a new security policy from the intersection of

		two compatible policies or selecting either of the equivalent policies, and d) Verify that the new Domain Security Policy is being enforced when managing keys protecting the domain's information.

4.9.4 Third-Party Sharing

When two entities (e.g., A and B) in different security domains have equivalent Domain Security Policies, and a third entity (C) has an equivalent Domain Security Policy with either A or B, then all three domain policies are equivalent.

When entities A and B have compatible, but not equivalent, Domain Security Policies, and entity A has an equivalent Domain Security Policy with entity C, then entities B and C have compatible Domain Security Policies. However, if entities A and B have compatible, but not equivalent, Domain Security Policies, and entity A has a compatible Domain Security Policy with entity C, then entities B and C do not necessarily have compatible Domain Security Policies, since the intersections between the policies may be different. Ideally, the domain authorities responsible for each domain would examine every other domain's security policies and verify that they are compatible before exchanges can occur. However, this may be an impractical task, so is not recommended.

When two entities examine each other's domain security policies for equivalence or compatibility, they should carefully examine each other's policies for sharing keys, metadata and other information with other entities, including their capabilities for protecting the shared information. See the Framework for further discussion.

4.9.5 Multi-level Security Domains

A security domain could contain information having more than one impact level (e.g., Moderate and High). In this case, an FCKMS must support key management for protecting the information at both impact levels. For this multi-level situation, the security domain acts much like two separate security domains, because it must distinguish between the two levels of protection. Each entity in the domain must ensure 1) that keys and/or metadata protected by the higher-level policy are always provided with the higher level of protection, 2) that keys and/or metadata protected by the lower-level policy cannot be confused with the higher-level keys and/or metadata, and 3) that higher-level keys and/or metadata do not get confused with lower-level keys and/or metadata. This typically involves a multi-level secure computer operating system.

FR: 4.21 The CKMS design **shall** specify whether or not it supports multilevel security domains.

FR:4.22 The CKMS design **shall** specify each level of security domain that it supports.

FR:4.23 I If multilevel security domains are supported, the CKMS design shall specify how it maintains the separation of the keys and metadata belonging to each security level.

PF:4.13.		A Federal CKMS **could** support a transaction between an entity from one security domain and an entity from another security domain by: a) Determining if the two Domain Security Policies are multi-level, b) Determining if the two policies have an acceptable intersection of the level of protection that can be provided for the information to be exchanged, and c) Supporting that level of protection.
PF:4.14.		A Federal CKMS **could** support one or more multi-level security domains.

4.9.6 Upgrading and Downgrading

Under certain conditions, a domain authority could decide that a key and/or metadata from an entity in a lower-level security domain (a domain providing less protection) can be accepted and protected at the higher level required by its own Domain Security Policy. This process is called upgrading. Upgrading should only be done if the authority responsible for the higher-level domain trusts the source and authenticity of the key and/or metadata from the lower level. Likewise, the domain authority for a higher-level security domain might need to pass a key and/or metadata to a lower-level security domain entity, requiring the protection on the key and/or metadata to be downgraded. In this case, the domain authority for the higher-level domain must be assured that the key and/or metadata being passed down only require the lower level of security provided by the receiver's lower-level domain.

FR:4.24 The CKMS design **shall** specify if and how it supports the upgrading or downgrading of keys and metadata.

FR:4.25 The CKMS design **shall** specify how upgrading or downgrading capabilities are restricted to the domain authority.

PR:4.10.		In a Federal CKMS, upgrading and downgrading **shall** be under the control of an authorized domain authority.

4.9.7 Changing Domain Security Policies

It may be desirable to change a Domain Security Policy. Some FCKMSs could have been designed so that their Domain Security Policies can be configured to permit changes. Any Domain Security Policy change must be supported by the capabilities of a configurable system, and the domain authority should approve any policy change before it is made. It is the responsibility of the Domain Authority initiating the change to inform other

affected Security Domain Authorities (e.g., other domains that have been determined to be equivalent or compatible) when such changes to a security policy are made.

FR:4.26 The CKMS design **shall** specify if and how its key and/or metadata management functions may be configured to support differing domain security policies and differing applications.

FR:4.27 The CKMS design **shall** specify if and how it can support changes in its Domain Security Policy by being reconfigured to accommodate communications with entities in different security domains.

PR:4.11.		A Federal CKMS **shall** perform the following actions before a changed Domain Security Policy is put into effect: a) Document the new Domain Security Policy, b) Evaluate its potential security consequences, c) Approve the changes for the modified security domain, d) Approve and implement the required FCKMS modifications, validate their correct implementation, and then test the modified FCKMS, e) Verify the correct and secure operation of the changed security domain protection mechanisms, and f) Coordinate with the domain authorities of other domains with which an equivalence or compatibility has previously been determined.

PF:4.15.		A Federal CKMS **could** support the manual configuration and/or automated negotiation of modified Domain Security Policies for interaction with entities in different domains that are approved by all affected Security Domain authorities.

5. Roles and Responsibilities

An FCKMS could interface with humans who are performing specific management, user, and/or operational roles. Each role should have specific requirements for a person that will be authorized to perform it. Each person that is authorized to perform a role should be provided access to a set of key and metadata management services that will assist in carrying out the responsibilities of the role.

Examples of FCKMS roles include, but are not limited to, the following. A description of each role is provided in the Framework.

a) System Authority,
b) System Administrator,
c) Cryptographic Officer,

d) Domain Authority,
e) Key Custodian,
f) Key Owner,
g) CKMS User,
h) Audit Administrator,
i) Registration Agent,
j) Key-Recovery Agent, and
k) CKMS Operator.

Multiple individuals could be assigned to perform a role, and/or one person could be authorized to perform multiple roles. Certain roles should not be performed by the same individual. It is prudent to rotate individuals periodically (and perhaps randomly) performing any role to minimize the likelihood of long-term abuses.

FR:5.1 The CKMS design **shall** specify each role employed by the CKMS, the responsibilities of each role, and how entities are assigned to each role.

FR:5.2 The CKMS design **shall** specify the key and metadata management functions (see Section 6.4) that can be used by entities fulfilling each role employed by the CKMS.

FR:5.3 The CKMS design **shall** specify which roles require role separation.

FR:5.4 The CKMS design **shall** specify how the role separation is maintained for the roles that require role separation.

FR:5.5 The CKMS design **shall** specify all automated provisions for identifying security violations, whether by individuals performing authorized roles (insiders) or by those with no authorized role (outsiders).

PR:5.1.		A Federal CKMS **shall** support the roles of System Authority, System Administrator, Audit Administrator and User, in addition to other roles specified in its CKMS design.
PR:5.2.		A Federal CKMS **shall** verify the authorization of the individual initiating one or more activities while performing a role, and restrict the activities of the person performing the role to those allowed by the specification of the role.
PR:5.3.		A Federal CKMS **shall** ensure that a person fulfilling the role of Audit Administrator cannot fulfill additional roles other than the user role.

PA:5.1.		A Federal CKMS **should** support the roles of Cryptographic Officer, Key Custodian, and Key Owner.

PA:5.2.		Other than the user role, the roles assumed in a Federal CKMS **should** be rotated periodically.

PF:5.1.		A Federal CKMS **could** support the roles of Domain Authority, Registration Agent, Key-Recovery Agent, and FCKMS Operator.

6. Cryptographic Algorithms, Keys, and Metadata

6.1 Cryptographic Algorithms and Keys

Cryptographic algorithms and their keys can be categorized according to their properties and uses. Algorithms and keys can be categorized as being symmetric (with secret keys) or asymmetric (with key pairs, one being public and the other private). Keys can be static (i.e., long term) or ephemeral (used only for a single secure session or key management transaction). Cryptographic algorithms can be used for signature generation, signature verification, data integrity authentication, entity identity verification, information encryption and decryption, and RNG (Random Number Generation). Each type of cryptographic algorithm requires a type of key appropriate for that algorithm and its current application. Key uses include signature, authentication, encryption/decryption, key wrapping, RNG (Random Number Generation), master key, key transport, key agreement, and authorization. General requirements relating to cryptographic algorithms and key strengths have been addressed in Section 2.1.

6.1.1 Key Types, Lengths and Strengths

The Framework provides a list of twenty-one key types (shown below in Table 1) and a short description of each key type.

Key Type
1) Private Signature Key
2) Public Signature Key
3) Symmetric Authentication Key
4) Private Authentication Key
5) Public Authentication Key
6) Symmetric Data Encryption/Decryption Key
7) Symmetric Key Wrapping Key
8) Symmetric RNG Key
9) Private RNG Key
10) Public RNG Key
11) Symmetric Master Key
12) Private Key Transport Key
13) Public Key Transport Key
14) Symmetric Key Agreement Key

Key Type
15) Private Static Key Agreement Key
16) Public Static Key Agreement Key
17) Private Ephemeral Key Agreement Key
18) Public Ephemeral Key Agreement Key
19) Symmetric Authorization Key
20) Private Authorization Key
21) Public Authorization Key

Table 1: Key Types

FR: 6.1 The CKMS design **shall** specify and define each key type used.

All key types that are specified as being required by an FCKMS service-using organization must be supported by the FCKMS of its FCKMS service-providing organization.

PR:6.1.		A Federal CKMS **shall** support all the key types and lengths specified in the CKMS design.

6.1.2 Key Protections

All keys managed by an FCKMS require integrity protection. Secret and private keys require confidentiality protection. FIPS-validated cryptographic modules have been designed to provide this protection when used in accordance with the associated security policy. However, when outside a FIPS-validated cryptographic module, either physical or cryptographic protection is required for these keys.

PR:6.2.		A Federal CKMS **shall** physically or cryptographically protect all symmetric and private keys from unauthorized disclosure, use, and modification.
PR:6.3.		A Federal CKMS **shall** support the protection of keys at a level that is commensurate with the impact level of the data to be protected by the keys.

PA:6.1.		A Federal CKMS **should** cryptographically protect all keys against unauthorized disclosure and modification when outside a cryptographic module.

6.1.3 Key Assurance

When cryptographic keys and domain parameters[6] are stored or distributed, they may pass through unprotected environments. In this case, specific assurances are required before the key and/or domain parameters may be used to perform cryptographic operations. Assurance of integrity is needed for all keys and metadata. Assurance of possession is needed for both secret and private keys. Assurance of domain parameter validity is needed for certain public-key algorithms. Assurance of validity is needed for symmetric keys and the public keys of public-key algorithms. See [SP 800-89], [SP 800-56A] and [SP 800-56B] for further discussion. Other assurances that may be needed include source authenticity.

PR:6.4.		A Federal CKMS **shall** verify the integrity of all keys when received or before initial use.
PR:6.5.		A Federal CKMS **shall** obtain the following assurances (as appropriate) before the initial operational use of a key: a) Domain parameter validity, b) Public-key validity, c) Private-key possession, and/or d) Secret-key possession.
PR:6.6.		A Federal CKMS **shall** obtain all key and domain parameter assurances using NIST-approved methods.

PA:6.2.		A Federal CKMS **should** support assuring a receiver of a transported key that it came from an authenticated and authorized source.

6.2 Key Metadata

Key metadata is defined as information associated with a particular key that is explicitly recorded and managed by the FCKMS.

The metadata that could be appropriate for a trusted association with a key should be selected by the CKMS designer, based upon a number of factors, including the key type, the key lifecycle state, and the CKMS Security Policy.

6.2.1 Metadata Elements

The following are metadata elements that are suggested and described in the Framework. The descriptions in the Framework should be carefully reviewed when making decisions with regard to their applicability. The suggested metadata elements are:

[6] Domain parameters are used in conjunction with some public-key algorithms to generate key pairs, to create digital signatures, or to establish keying material. Domain parameters are included in the metadata associated with certain keys.

a) Key label,
b) Key identifier,
c) Owner identifier,
d) Key lifecycle state,
e) Key format specifier,
f) Product used to create the key,
g) Cryptographic algorithm using the key,
h) Schemes or modes of operation,
i) Parameters for the key,
j) Length of the key,
k) Security strength of the key/algorithm pair,
l) Key type,
m) Appropriate application(s) for the key,
n) Key security policy identifier,
o) Key list (ACL) ,
p) Key usage count,
q) Parent key: This element could have two sub-elements:
    i. Key identifier, and
    ii. Nature of the relationship.
r) Key sensitivity,
s) Key protections: This element could have several sub-elements:
    i. The mechanism used for integrity protection,
    ii. The mechanism used for confidentiality protection
    iii. The mechanism used for source authentication, and
    iv. An indication of the protections that are enforced by a particular non-cryptographic trusted process.
t) Metadata protections: This element could have several sub-elements:
    i. The mechanism used for integrity protection,
    ii. The mechanism used for confidentiality protection,
    iii. The mechanism used for source authentication, and
    iv. An indication of the protections that are enforced by a particular non-cryptographic trusted process.
u) Trusted association protections: The following may need to be provided for each trusted association protection:
    i. The mechanism used for integrity protection, and
    ii. The mechanism used for source authentication.
v) Date-Times:
    i. The generation date,
    ii. The association date,
    iii. The activation date,
    iv. The future activation date,
    v. The renewal date,
    vi. The future renewal data,
    vii. The date of the last rekey,

viii. The future rekey date,
ix. The date of the last usage of the key,
x. The deactivation date,
xi. The future deactivation date,
xii. The expiration date,
xiii. The revocation date,
xiv. The compromise date,
xv. The destruction date, and
xvi. The future destruction date.

w) Revocation Reason.

These metadata elements specify a key's important characteristics, its acceptable uses, and other information that is related to the key and is used by an FCKMS when managing and protecting the key. Metadata elements relevant to the management and use of a key should be correctly associated with a key and used whenever a key is stored, retrieved, loaded into a cryptographic module, used to protect data (e.g., other keys), exchanged with peer entities authorized to use the key, and when assuring that a key is correctly protected.

FR: 6.2 For each key type used in the system, the CKMS design **shall** specify all metadata elements selected for a trusted association, the circumstances under which the metadata elements are created and associated with the key, and the method of association (i.e., cryptographic mechanism or trusted process).

FR: 6.3 For each cryptographic mechanism used in the Key Protections metadata element (item s above), the CKMS design **shall** specify the following:

i. The cryptographic algorithm: See item g) above.
ii. The parameters for the key: See item i) above.
iii. The key identifier: See item b) above.
iv. The protection value: This element contains the protection value for integrity protection, confidentiality protection, or source authentication. For example, a properly implemented MAC or digital signature technique may provide for integrity protection and/or source authentication.
v. When the protection was applied.
vi. When the protection was verified.

FR:6.4 For each non-cryptographic trusted process used in the Key Protections metadata element (item s above), the CKMS design **shall** specify the following:

i. The identifier of the process used to distinguish it from other processes, and
ii. A description of the process or a pointer to a description of the process.

FR:6.5 For each cryptographic mechanism used in the Metadata Protections metadata element (item t above), the CKMS design **shall** specify the following:

i. The cryptographic algorithm.

ii. The parameters for the key.
iii. The key identifier.
iv. The protection value (e.g., MAC, digital signature).
v. When the protection was applied.
vi. When the protection was verified.

Generally, the same mechanism will be used for the key and bound metadata, especially if the key and metadata are bundled together.

FR:6.6 For each non-cryptographic trusted process used in the Metadata Protections metadata element (item t above), the CKMS design **shall** specify the following:

i. The identifier that is used to distinguish this process from other processes, and
ii. A description of the process or a pointer to a description of the process.

FR:6.7 For each cryptographic mechanism used in the Trusted Association Protections metadata element (item u above), the CKMS design **shall** specify the following:

i. The cryptographic algorithm,
ii. The parameters for the key,
iii. The key identifier,
iv. The protection value (e.g., MAC, digital signature),
v. When the protection was applied, and
vi. When the protection was verified.

FR:6.8 For each non-cryptographic trusted process used in the Trusted Association Protections metadata element (item u above), the CKMS design **shall** specify the following:

i. The identifier that is used to distinguish this process from other processes, and
ii. A description of the process or a pointer to a description of the process.

FR:6.9 The CKMS design **shall** specify the accuracy and precision required for dates and times used by the system.

FR:6.10 The CKMS design **shall** specify what authoritative time sources are used to achieve the required accuracy.

FR:6.11 The CKMS design **shall** specify how authoritative time sources are used to achieve the required accuracy.

FR:6.12 The CKMS design **shall** specify which dates, times, and functions require a trusted third-party time stamp.

PR:6.7.		A Federal CKMS **shall** support all metadata elements that are specified in its CKMS design.

PR:6.8.		A Federal CKMS **shall** physically or cryptographically protect all sensitive metadata from unauthorized disclosure, use, and modification.
PR:6.9.		A Federal CKMS **shall** support the protection of metadata at a level that is commensurate with the impact level of the data to be protected by the associated key.
PR:6.10.		A Federal CKMS **shall** verify the integrity of all metadata when received or before the initial use of its key.
PR:6.11.		A Federal CKMS **shall** maintain the association between a key and its metadata.
PR:6.12.		A Federal CKMS **shall** use the NIST time source when access to a time source is required.

PA:6.3.		A Federal CKMS **should** cryptographically protect all sensitive metadata against unauthorized disclosure and all metadata against unauthorized modification when outside a cryptographic module.
PA:6.4.		A Federal CKMS **should** explicitly support the following list of metadata elements: key label, key identifiers, key owner identifier(s), and the cryptographic algorithm using the key.
PA:6.5.		A Federal CKMS **should** provide cryptographic binding between a key and its metadata elements.
PA:6.6.		A Federal CKMS **should** support a source authentication of the metadata elements for all cryptographic keys.

PF:6.1.		A Federal CKMS **could** support a security domain identifier metadata element.

6.2.2 Required Key and Metadata Information

Each key type requires certain metadata to be available when a key is used, whether the information is explicitly recorded as metadata or is otherwise known by the FCKMS.

FR: 6.13 For each key type, the CKMS design **shall** specify the following information regarding keys and metadata elements:

a) The key type.
b) The crypto period (for static keys).
c) The method of generation.
    i. The RNG used.

ii. A key generation specification (e.g., [FIPS 186] for signature keys, [SP 800-56A] for Diffie-Hellman key establishment keys).

d) For each metadata element, include
   i. The source of the metadata, and
   ii. How the metadata is vetted,
e) The method of key establishment
   i. The key transport scheme (if used),
   ii. The key agreement scheme (if used), and
   iii. The protocol name (if a named protocol is used).
f) The disclosure protections (e.g., key confidentiality, physical security).
g) The modification protections (e.g., a MAC or a digital signature).
h) The applications that may use the key (e.g., TLS, EFS, S/MIME, IPSec, PKINIT, SSH, etc.).
i) The applications that are not permitted to use the key.
j) The key assurances:
   i. Symmetric key assurances (e.g., format checks):
      - Who obtains the assurance,
      - The circumstances under which it is obtained, and
      - How the assurance is obtained.
   ii. Asymmetric key assurances (e.g., assurance of possession and validity):
      - Who obtains the assurances,
      - The circumstances under which the assurance is obtained, and
      - How the assurance is obtained.
   iii. Domain parameter validity checks:
      - Who performs the validity check,
      - The circumstances under which the checking is performed, and
      - How the assurance of domain parameter validity was obtained.

FR: 6.14 The CKMS design **shall** specify all syntax, semantics, and formats of all key types and their metadata that will be created, stored, transmitted, processed, and otherwise managed by the CKMS.

6.3 Key Lifecycle States and Transitions

A key may pass through several states between its generation and its destruction. For a discussion of key states, see Section 7 of [NIST SP 800-57, Part 1]. A CKMS designer will select and define the key states and transitions that will be supported by the FCKMS.

FR: 6.15 The CKMS design **shall** specify all the states that the CKMS keys can attain.

FR: 6.16 The CKMS design **shall** specify all transitions between the CKMS key states and the data (inputs and outputs) involved in making the transitions.

PR:6.13.		A Federal CKMS **shall** support at least the following key lifecycle states and protect transitions among them: active,

		deactivated, revoked, and compromised.

PA:6.7.		A Federal CKMS **should** support the destroyed state.

PF:6.2.		A Federal CKMS **could** support the following key lifecycle states and verify the integrity and acceptability of transitions among them: pre-activated, suspended, and reactivated after a suspension.

6.4 Key and Metadata Management Functions

Cryptographic key management services could be automatically initiated by an FCKMS, a user, or an application. The functions themselves could be controlled or performed entirely within a cryptographic module, or could be located outside the cryptographic module and include calls to the cryptographic module as needed. The authentication and authorization of an entity initiating a key management service or cryptographic function should be performed by an Access Control System (ACS) (see Section 6.7.1).

An FCKMS should provide for the creation, modification, replacement, and destruction of keys and their metadata. Depending on the function, the input and/or output could have integrity, source authentication, and/or confidentiality services applied to them.

Parameters for a cryptographic function should be verified during input to an FCKMS and a cryptographic module by verifying the protections (e.g., integrity codes) that have been placed on the parameters.

FR: 6.17 The CKMS design **shall** specify the key and metadata management functions to be implemented and supported.

FR: 6.18 The CKMS design **shall** identify the integrity, confidentiality, and source authentication services that are applied to each key and metadata management function parameter implemented in the CKMS.

PR:6.14.		A Federal CKMS **shall** support all key and metadata management functions that are specified in its CKMS design.
PR:6.15.		A Federal CKMS **shall** support the verification of the integrity of the request.

PA:6.8.		A Federal CKMS **should** support the following key and metadata management functions: generate a key, deactivate a key, register an owner, revoke a key, associate a key with its

		metadata, list key metadata, destroy a key and its metadata, establish a key, validate a key, recover a key and its metadata, and perform cryptographic functions using a key and its metadata.
PA:6.9.		A Federal CKMS **should** support the following for all user requests for key management services: a) The authentication of the identity of the entity initiating the request, and b) A verification of the requestor's authorization for receiving the service.

PF:6.3.		A Federal CKMS **could** support source authentication, initiator authorization, and availability assurances for key management services.
PF:6.4.		A Federal CKMS **could** support integrity protection for the response to a user's request for key management services.

6.4.1 Generate Key

When a user requires a key, and it is not automatically provided by an FCKMS, the user should request that a key be generated by the FCKMS. The user may need to specify the type of key and other necessary parameters (e.g., the name of the key-generation technique), including some metadata that needs to be associated with the key when requesting this function. The function does not necessarily return the newly generated key, but could, for example, return a key identifier that points to the key and its associated metadata.

Key-generation techniques typically depend on the cryptographic algorithm that will be used with the key. Different algorithms use keys that have differing specifications (e.g., lengths and formats). Key generation for an asymmetric algorithm results in the generation of a key pair, rather than a single key, which is the case for symmetric-key algorithms. NIST has approved several random number generators (see [SP 800-90A] and SP 800-131A) and specifications for key generation (see [SP 800-133]).

The key-generation function could provide, or require the input of, metadata that is to be associated with the generated key.

FR:6.19 The CKMS design **shall** specify the key generation methods to be used in the CKMS for each type of key.

FR:6.20 The CKMS design **shall** specify the underlying random number generators that are used to generate symmetric and private keys.

PR:6.16.		A Federal CKMS **shall** support and use NIST-approved methods for key generation.
PR:6.17.		A Federal CKMS **shall** generate keys using a NIST-approved random number generator that supports the security strength required for the key.

6.4.2 Register Owner

The initial registration of a security entity (i.e., individual (person), organization, device or process) and a cryptographic key with metadata is a fundamental requirement of every FCKMS. This requirement is difficult to fully automate while preserving security (i.e., protecting from an impersonation threat), and thus, it usually requires verified and authorized human interactions. There typically exists a registration process in an FCKMS that binds each entity's initial set of long-term (i.e., static) secret, public, or private keys with the entity's identifier and perhaps other metadata. The process of binding a key owner's identifier, key, and metadata involves either an initial identity authentication by a human relying on specific identification information or relying on the pre-existing identity of the owner in some FCKMS.

FR: 6.21 The CKMS design **shall** specify all the processes involved in owner registration, including the process for binding keys with the owner's identifier.

PR:6.18.		During a registration process, a Federal CKMS **shall** register all security entities, and initial cryptographic keys and metadata.
PR:6.19.		A Federal CKMS **shall:** a) Support the initial registration and periodic verification of each security entity that is to be managed, and b) Manage the association of each security entity with its key and its associated metadata.

6.4.3 Activate Key

The activation function provides for the transition of a cryptographic key from the pre-activation state to the active state (see [SP 800-57-Part 1] for further information). A key could be automatically activated immediately after generation, upon request, or in accordance with a date-time metadata value (e.g., set at the time of key generation) that indicates when the key needs to become active and can be used.

FR: 6.22 The CKMS design **shall** specify how each key type is activated and the circumstances for activating the key.

FR: 6.23 For each key type, the CKMS design **shall** specify requirements for the notification of key activation, including which parties are notified, how they are notified,

what security services are applied to the notification, and the time-frames for notification(s).

6.4.4 Deactivate Key

This function transitions a key from an active state to a de-active state (see [SP 800-57-Part 1] for further information). A cryptographic key is generally given a deactivation date and time when it is created and distributed. Deactivation may also be based on the number of times a key has been used or the amount of data that it has been used to protect. The period of time between activation and deactivation of a key is generally considered its lifetime or its cryptoperiod. This period usually has a maximum value, based in part on the impact levels of the data it is protecting and the threats that could be brought against that key or the entire FCKMS.

FR: 6.24 The CKMS design **shall** specify for each key type how deactivation of the key is determined (e.g., by crypto period, by number of uses, or by amount of data).

FR: 6.25 The CKMS design **shall** specify how each key type is deactivated (e.g., manually or automatically, based on the deactivation date-time, the number of usages, or the amount of protected data).

FR: 6.26 The CKMS design **shall** specify how the deactivation date-time for each key type can be changed.

FR: 6.27 For each key type, the CKMS design **shall** specify requirements for advance notification of the deactivation of the key type, including which CKMS supported roles are notified, how they are notified, what security services are applied to the notification, and the time-frames for notification(s).

PR:6.20.		A Federal CKMS **shall** support deactivating an active symmetric or private key and notifying relying parties that the key has been deactivated.

PF:6.5.		A Federal CKMS **could** notify relying parties when a key has been deactivated

6.4.5 Revoke a Key

Key revocation should be used when the authorized use of a key must be terminated prior to the end of its cryptoperiod. A cryptographic key should be revoked as soon as feasible after its use is no longer authorized (e.g., the key has been compromised). Entities that have been, are, or will be using the key (i.e., relying parties) need to be notified that the key has been revoked; such notification includes both sending the notification to all relying parties and providing a notification that can be accessed by the relying parties, when needed.

FR: 6.28 The CKMS design **shall** specify when, how, and under what circumstances revocation is performed and revocation information is made available to the relying parties.

PR:6.21.		A Federal CKMS **shall** support the revocation of a key and maintaining the reason for revocation.
PR:6.22.		A Federal CKMS **shall** provide a notification when a key is revoked, including the reason for the revocation.

6.4.6 Suspend and Re-Activate a Key

A key may be temporarily suspended and later re-activated, i.e., suspension is a temporary revocation of the key. While revocation is generally irreversible, suspension can be reversed. Entities that may be using or relying on a key should be notified of both the suspension and the re-activation of the key.

Situations that may warrant suspension of a key, rather than irreversible revocation, include: the unavailability of the owner for an extended period of time, a misuse of the key, a possible compromise that is under investigation, and the misplacement of a token containing the key.

FR: 6.29 The CKMS design **shall** specify how, and under what circumstances, a key can be suspended.

FR: 6.30 The CKMS design **shall** specify how suspension information is made available to the relying or communicating parties.

FR :6.31 The CKMS design **shall** specify how, and under what circumstances, a suspended key is re-activated.

FR: 6.32 The CKMS design **shall** specify how the suspended key is prevented from performing security services.

FR: 6.33 The CKMS design **shall** specify how re-activation information is made available to the relying or communicating parties.

PR:6.23.		When a key is suspended, a Federal CKMS **shall** provide a notification to all relying parties, including the reason for the suspension.
PR:6.24.		When a key is re-activated after a suspension, a Federal CKMS **shall** provide a notification to all relying parties.

PF:6.6.		A Federal CKMS **could** be capable of suspending and reactivating keys and informing all relying parties of each action as soon as practical.

6.4.7 Renew a Public Key

Public key certificates contain the public key of an asymmetric key pair and a maximum validity period for that certificate. It may be desirable to have a public key validity period that is shorter than the subject key's cryptoperiod. Renewal establishes a new validity period for an existing public key by issuing a new certificate containing the same public key with a new validity period. The sum of the validity periods must not exceed the cryptoperiod of the key.

An FCKMS could notify the owner of a certificate when a certificate is about to expire so that the key could be renewed prior to the end validity date on the certificate.

FR: 6.34 The CKMS design **shall** specify how and the conditions under which a public key can be renewed.

FR: 6.35 For each key type, the CKMS design **shall** specify requirements for advance notification of the key type renewal, including which parties are notified, how they are notified, what security services are applied to the notification, and the time-frames for notification(s).

PR:6.25.		A Federal CKMS **shall not** renew the validity period of a public key certificate beyond the maximum cryptoperiod of the private key that corresponds to the public key in the certificate.

PF:6.7.		A Federal CKMS **could** notify the owner of a public-key certificate that the certificate is about to expire.
PF:6.8.		A Federal CKMS **could** provide notification to the relying parties of a public key that a public key has been renewed.

6.4.8 Key Derivation or Key Update

When a key is derived from other information (some of which is secret) in a non-reversible manner, the process is called key derivation. Key update is a special case of key derivation in which the secret information includes a key (K_1), and the derived key (K_2) replaces K_1. Key updating could result in a security exposure if an adversary obtains a key and knows the update process used. Key update is not supported in this Profile.

FR: 6.36 The CKMS design **shall** specify all processes used to derive or update keys and the circumstances under which the keys are derived or updated.

FR: 6.37 For each key type, the CKMS design **shall** specify requirements for advance notification for deriving or updating the keys, including which parties are notified, how they are notified, what security services are applied to the notification, and the time-frames for notification(s).

PR:6.26.		A Federal CKMS **shall not** support key update.
PR:6.27.		A Federal CKMS **shall** use only NIST-approved or allowed key derivation functions.

6.4.9 Destroy a Key and Metadata

Keys and some portion of their metadata must be destroyed beyond recovery when they are no longer to be used; this includes copies in backup storage**.** All other copies of the key and the portion of metadata not in archive storage should also be destroyed.

FR: 6.38 The CKMS design **shall** specify how and the circumstances under which keys are intentionally destroyed and whether the destruction is local to a component or universal throughout the CKMS.

FR: 6.39 For each key type, the CKMS design **shall** specify requirements for an advance notification of key destruction, including which parties are notified, how they are notified, what security services are applied to the notification, and the time-frames for notification(s).

PR:6.28.		When the destroyed state is supported, a Federal CKMS **shall** destroy a key and its associated metadata in both operational and backup storage using an **approved** method.

PF:6.9.		Within one hour of the destruction of a key and its associated metadata. a Federal CKMS **could** notify all relying parties of the destruction using a mechanism that provides integrity protection and source authentication.

6.4.10 Associate a Key with its Metadata

A cryptographic key could have several metadata elements associated with it. The CKMS designer determines which metadata are to be associated with a key and selects the protection mechanism(s) that provide(s) the association. Depending on the sensitivity of a metadata element, the metadata element could require confidentiality protection, integrity protection, and source authentication. The association function uses cryptography or a trusted process to provide these protections.

FR: 6.40 For each key type used, the CKMS design **shall** specify what metadata is associated with the key, how the metadata is associated with the key, and the circumstances under which metadata is associated with the key.

FR: 6.41 For each key type used, the CKMS design **shall** describe how the following security services (protections) are applied to the associated metadata: source authentication, integrity, and confidentiality.

PR:6.29.		A Federal CKMS **shall** support trusted associations between keys and their metadata.
PR:6.30.		A Federal CKMS **shall** create a trusted association between a key and its metadata upon their entry to the FCKMS, maintain the trusted association while in storage, and establish a new trusted association following modification or replacement of any metadata.

PA:6.10.		A Federal CKMS **should** provide a cryptographic association between a key and its metadata.

6.4.11 Modify Metadata

The modify metadata function can be used to modify existing metadata that is associated with a key. Some metadata elements for a key type may be fixed after creation and not modifiable; other metadata elements may by modified by some entities, but not by others. Unauthorized modification of metadata that are associated with a key by an unauthorized entity must be prevented, and attempts should be detected and reported.

FR: 6.42 The CKMS design **shall** specify the circumstances under which associated metadata is modified.

PR:6.31.		A Federal CKMS **shall** prevent the modification of metadata except by authorized entities.

PA:6.11.		A Federal CKMS **should** report the attempted modification of metadata by unauthorized entities.

PF:6.10.		A Federal CKMS **could** designate some metadata elements associated with a key as writable, and other metadata elements as non-writable after the initial creation of that metadata element.

6.4.12 Delete Metadata

This function deletes metadata associated with a key. A deletion of the metadata requires the authentication of the requestor and verification of his/her authorization. Metadata elements may be deleted as an entire group, as an individual element, or as a specific subset of the elements.

FR: 6.43 The CKMS design **shall** specify the circumstances under which the metadata associated with a key is deleted.

FR: 6.44 The CKMS design **shall** specify the technique used to delete associated metadata.

PR:6.32.		A Federal CKMS **shall** allow metadata destruction only by authenticated and authorized entities.
PR:6.33.		A Federal CKMS **shall** support the selection of which metadata elements can be destroyed and the designation of who is authorized to perform the destruction.

6.4.13 List Key Metadata

This function allows an authorized entity to list one or more metadata elements of a key. The authorization of an entity to use a key does not automatically authorize that entity to list the key's metadata elements. Each metadata element could be assigned with a different set of permissions, e.g., some metadata elements could be prohibited from being listed at all, others could be listable by any user, while still others could be listable by only persons assuming an administrator role.

FR: 6.45 For each key type, the CKMS design **shall** specify which metadata can be listed by authorized entities.

PR:6.34.		A Federal CKMS **shall** list only specific requested and authorized metadata elements for authorized entities.

6.4.14 Store Operational Key and Metadata

Operational key and metadata storage involves placing a key and/or metadata in storage outside of a cryptographic module for use during the key's cryptoperiod without retaining the original copy in the cryptographic module. Keys and metadata should be physically or cryptographically protected when in storage (see [SP 800-57-Part 1]).

FR: 6.46 For each key type, the CKMS design **shall** specify: the circumstances under which keys of each type and their metadata are stored, where the keys and metadata are stored, and how the keys and metadata are protected.

PR:6.35.		A Federal CKMS **shall** cryptographically or physically protect the integrity of all stored keys and metadata, and the confidentiality of stored private keys, secret keys, and their sensitive metadata.

PA:6.12.		A Federal CKMS **should** cryptographically protect stored keys and metadata.

6.4.15 Backup of a Key and its Metadata

The backup of keys and metadata involves copying the keys and/or metadata to a separate medium than is used for the operational storage of keys and from which the keys can be recovered if the original (operational) copy is lost, modified, or otherwise becomes unavailable. Keys and metadata could be backed up by the FCKMS, the owner or a trusted entity.

FR: 6.47 The CKMS design **shall** specify how, where, and the circumstances under which keys and their metadata are backed up.

FR: 6.48 The CKMS design **shall** specify the security policy for the protection of backed-up keys/metadata.

FR: 6.49 The CKMS design **shall** specify how the security policy is implemented during the key and metadata back up, e.g., how the confidentiality and multi-party control requirements are implemented during transport and storage of the backed-up keys and metadata.

PR:6.36.		When keys and metadata are backed up, a Federal CKMS **shall** provide them with the same integrity and confidentiality protections as the operational copies of the keys and metadata and at the same or a higher security strength.

PA:6.13.		A Federal CKMS **should** backup long-term keys and metadata on a medium that is separate from that used for the operational storage of the keys and metadata.

6.4.16 Archive Key and/or Metadata

Key and/or metadata archiving involves placing a copy of a key and/or metadata in a safe storage facility so that they can be recovered if and when needed. Key/metadata archiving requires provisions for moving the key/metadata to a new storage medium before the old medium is replaced or becomes unreadable.

An archive should support the FCKMS Security Policy (see Section 4.3) in archive facilities and when moving keys and metadata to and from an archive. Archived keys

and/or metadata must be physically or cryptographically protected. Keys used to protect archived keys and/or metadata will have cryptoperiods, and must be replaced when their cryptoperiods expire. Changing an archive key may involve changing to a stronger cryptographic algorithm and archive key, and re-encryption of the archived keys and/or metadata under the new archive key.

Maintaining a key and metadata archive could require moving archived keys and/or metadata to new storage media when the old media are no longer readable because of the aging of, or technical changes to, the media and media readers. When the archived keys and/or metadata have been transferred to a new storage medium, the copies on the old storage medium must be destroyed.

FR: 6.50 The CKMS design **shall** specify how, where, and the circumstances under which keys and/or their metadata are archived.

FR: 6.51 The CKMS design **shall** specify the technique for the secure destruction of the key and/or metadata or the secure destruction of the old storage medium after being written onto a new storage medium.

FR: 6.52 The CKMS design **shall** specify how keys and/or their metadata are protected after the cryptoperiod of an archive key expires.

PR:6.37.		When keys and metadata are archived, a Federal CKMS **shall** provide them with the same integrity and confidentiality protections as the operational copies of the keys and metadata and at the same or a higher security strength.
PR:6.38.		When keys and metadata are archived, a Federal CKMS **shall** archive keys and metadata in accordance with applicable laws, regulations, and policies.
PR:6.39.		When archived keys and metadata are moved to a new medium, a Federal CKMS **shall** destroy the copies of keys and metadata on the old storage medium.

PA:6.14.		A Federal CKMS **should** archive long-term keys and metadata in accordance with [SP 800-57, Part 1].
PA:6.15.		A Federal CKMS **should** move archived keys and metadata to an alternate readable storage medium before the old medium is replaced or becomes unreadable.

6.4.17 Recover Key and/or Metadata

Key and/or metadata recovery involves obtaining a copy of a key and/or its metadata that have been previously backed up, or archived. The key and/or metadata must be recovered

by an authorized entity (e.g., its owner or a key-recovery agent) following the rules for recovery stated in the FCKMS Security Policy.

FR: 6.53 The CKMS design **shall** specify the CKMS recovery policy for keys and/or metadata.

FR: 6.54 The CKMS design **shall** specify the mechanisms used to implement and enforce the recovery policy for keys and/or metadata.

FR: 6.55 The CKMS design **shall** specify how, and the circumstances under which, keys and/or metadata are recovered from each key database or metadata storage facility.

FR: 6.56 The CKMS design **shall** specify how keys and/or metadata are protected during recovery.

PR:6.40.		A Federal CKMS **shall** support recovering keys and/or metadata that have been backed up or archived, following the FCKMS rules for recovery.
PR:6.41.		A Federal CKMS **shall** protect the integrity and (if appropriate) the confidentiality of keys and metadata during recovery.

6.4.18 Establish a Key

Key establishment is the process by which a key is securely shared between two or more entities. The key may be transported from one entity to another (key transport), or the key may be derived from a shared secret generated by the entities (key agreement). The method of transporting keys or sharing information may be either manual (e.g., sent by courier) or automated (e.g., sent over the Internet).

FR: 6.57 The CKMS design **shall** specify how, and the circumstances under which, keys and their metadata are established.

PR:6.42.		When secure interoperability is required, a Federal CKMS **shall** support establishing a key and associated metadata between entities.

6.4.19 Enter a Key and Associated Metadata into a Cryptographic Module

The key-entry function of a cryptographic module is used to enter one or more keys and associated metadata into the module in preparation for use. Keys and metadata could be entered in plaintext form, in encrypted form, as key splits, in an integrity-protected form (e.g., in a signed certificate), or any combination thereof.

Keys used for the protection of information having a Low impact level can be entered as either plaintext, split components, or in encrypted form; the associated metadata may be entered as plaintext or in encrypted form. Keys used for protecting information having higher impact levels must be entered as split components or in encrypted form; for the higher impact levels, sensitive metadata must be entered in encrypted form, but non-sensitive metadata may be entered in either plaintext or encrypted form.

FR: 6.58 The CKMS design **shall** specify how, and the circumstances under which, keys and metadata are entered into a cryptographic module, the form in which they are entered, and the method used for entry.

FR: 6.59 The CKMS design **shall** specify how the integrity and confidentiality (if necessary) of the entered keys and metadata are protected and verified upon entry.

PR:6.43.		A Federal CKMS **shall** enter keys used to protect information at the Moderate or High impact levels into a cryptographic module as split components or in encrypted form.
PR:6.44.		A Federal CKMS **shall** enter the sensitive metadata associated with keys used to protect information at the Moderate or High impact levels into a cryptographic module in encrypted form.
PR:6.45.		A Federal CKMS **shall** verify the validity of a cryptographic key after entering the key into a cryptographic module.
PR:6.46.		A Federal CKMS **shall** assure that keys and their metadata are protected against replacement, modification, and unauthorized disclosure during entry into a cryptographic module.

PA:6.16.		A Federal CKMS **should** enter keys used to protect information at the Low impact level into a cryptographic module as split components or in encrypted form.
PA:6.17.		A Federal CKMS **should** enter the sensitive metadata associated with keys used to protect information at the Low impact level into a cryptographic module in encrypted form.

6.4.20 Output a Key and Associated Metadata from a Cryptographic Module

The key-output function of a cryptographic module outputs one or more keys and their associated metadata from the module. The output of keys and metadata could be needed in order to store (outside the cryptographic module), transfer, back up, or archive them. A cryptographic module that serves as a key generation facility for other FCKMS modules would output keys prior to distribution.

Keys and metadata used for the protection of information having a low impact level can be output as either plaintext, split components, or in encrypted form. Keys and metadata used for protecting information having higher impact levels must be output as split components or in encrypted form.

FR: 6.60 The CKMS design **shall** specify how, and the circumstances under which, keys and metadata can be output from a cryptographic module and the form in which they are output.

FR: 6.61 The CKMS design **shall** specify how the confidentiality and integrity of the output keys and metadata are protected while outside of a cryptographic module.

FR: 6.62 If a private key, symmetric key, or confidential metadata is output from the cryptographic module in plaintext form, the CKMS design **shall** specify if and how the calling entity is authenticated before the key and metadata are provided.

PR:6.47.		When keys and metadata to be used for the protection of information at a Moderate or High impact level are output from a cryptographic module, a Federal CKMS **shall** output them in encrypted form or using split-knowledge procedures.
PR:6.48.		A Federal CKMS **shall** assure that keys and their metadata are protected against replacement, modification, and unauthorized disclosure during output from a cryptographic module.

PA:6.18.		A Federal CKMS **should** output keys and sensitive metadata used to protect information having a low impact level from a cryptographic module as split components or in encrypted form.

6.4.21 Validate Public-Key Domain Parameters

This function performs certain validity checks on the public domain parameters of some public-key algorithms (e.g., Diffie-Hellman key establishment and ECDSA).

FR: 6.63 The CKMS design **shall** specify how, where, and the circumstances under which, public-key domain parameters are validated.

PR:6.49.		For applicable public-key algorithms, a Federal CKMS **shall** validate a public key's domain parameters as specified in [SP 800-56A] and [SP 800-89].

6.4.22 Validate Public Key

This function performs certain validity checks on a public key to provide some assurance that it is arithmetically correct.

FR: 6.64 The CKMS design **shall** specify how, where, and the circumstances under which, public keys are validated**.**

PR:6.50.		A Federal CKMS **shall** assure that public keys have been validated as specified in [SP 800-56A], [SP 800-56B] and [SP 800-89].

6.4.23 Validate Public Key Certification Path

This function validates the certification path (also known as a certificate chain), from the trust anchor[7] of the relying entity to a public key in which the relying entity needs to establish trust (i.e., the public key of the other entity in a transaction). Validation of the certification path provides assurance that the identity of the originating entity as specified in the certificate is the owner of the public key in the certificate and is the holder of the corresponding private key. The latter assumes that proof of private-key possession was verified by a trusted certificate authority.

FR: 6.65 The CKMS design **shall** specify how, where, and the circumstances under which, a key certification path is validated.

PR:6.51.		A Federal CKMS **shall** validate the certification path of a public key prior to using the public key in the certificate.

6.4.24 Validate Symmetric Key

This function performs tests on a symmetric key to validate its integrity, such as verifying that the length and format are correct. This command could also verify any error detection/correction codes or integrity checks placed upon the key and/or its metadata.

FR: 6.66 The CKMS design **shall** specify how, where, and the circumstances under which symmetric keys and/or metadata are validated.

PR:6.52.		A Federal CKMS **shall** validate a symmetric key before initial use.

[7] A trust anchor is a trusted public key that is usually cached locally in a trust-anchor store. Also discussed in Section 6.4.28.

6.4.25 Validate Private Key (or Key Pair)

This function performs tests on a private key to verify that it meets its specifications. This test can only be performed by the private-key owner or a trusted third party acting on behalf of the private-key owner.

FR:6.67 The CKMS design **shall** specify how, where and the circumstances under which, private keys or key pairs and/or metadata can be validated

PR:6.53.		A Federal CKMS **shall** validate a private key as specified in [SP 800-56A] and [SP 800-56B] before its first use.

6.4.26 Validate the Possession of a Private Key

This function is used by an entity that receives a public key and needs assurance that the claimed owner of the public key has possession of the corresponding private key. This function could also validate that a private-key owner actually possesses his/her own private-key.

FR: 6.68 The CKMS design **shall** specify how, where, and the circumstances under which, possession of private keys and their metadata are validated.

PR:6.54.		A Federal CKMS **shall** obtain assurance of private-key possession by the key's owner, as specified in [SP 800-56A], [SP 800-56B] and [SP 800-89].

6.4.27 Perform a Cryptographic Function using the Key

Cryptographic functions using keys are performed in a cryptographic module to cryptographically protect all data, including metadata and other keys. These functions may include signature generation, signature verification, data encryption, ciphertext decryption, key wrapping, key unwrapping, MAC generation, and MAC verification.

FR: 6.69 The CKMS design **shall** specify all cryptographic functions that are supported and where they are performed in the CKMS (e.g., CA, host, or end user system).

PR:6.55.		A Federal CKMS **shall** use cryptographic modules that support all cryptographic algorithms required by the FCKMS.

6.4.28 Manage the Trust Anchor Store

An FCKMS could require that some entities have one or more trusted public keys, called "trust anchors." Trust anchors are cached in a trust anchor store. A trust anchor can establish trust in other public keys that might not otherwise be trusted. Therefore, the integrity of trust anchors is critical to the security of the FCKMS. The FCKMS typically supports trust-anchor management functions, such as adding, deleting and storing trust anchors.

Many commonly used products, such as browsers, are delivered and initially installed with an assortment of trust anchors, not all of which merit trust.

FR: 6.70 The CKMS design **shall** specify all trust anchor management functions that are supported (see RFC 6024).

FR: 6.71 The CKMS design **shall** specify how the trust anchors are securely distributed so that the relying parties can perform source authentication and integrity verification on those trust anchors.

FR: 6.72 The CKMS design **shall** specify how the trust anchors are managed in relying-entity systems to ensure that only authorized additions, modifications, and deletions are made to the relying-entity system's trust anchor store.

PR:6.56.		Only trust anchors that are required and merit trust for Federal CKMS use **shall** be used within and by an FCKMS.
PR:6.57.		Only authorized additions, modifications, and deletions **shall** be made to trust anchors within an FCKMS.

PA:6.19.		A Federal CKMS **should** use trust anchor formats as specified in [RFC 5914] or its revisions.
PA:6.20.		A Federal CKMS **should** perform source authentication, usage authorization, and integrity checks on trust anchors before they are initially used.

6.5 Cryptographic Key and/or Metadata Security: In Storage

Cryptographic keys are typically stored with their metadata. An FCKMS should verify the authorization of the submitting entity and the integrity of the submitted key and metadata before they are stored. See Section 6.5 of the Framework for further discussion.

An FCKMS should only allow authorized users to have access to stored keys. Thus, stored keys and metadata should be protected by an Access Control System (ACS) (see Section 6.7.1).

FR: 6.73 The CKMS design **shall** specify the methods used to authenticate the identity and verify the authorization of the entity submitting keys and/or metadata for storage.

FR: 6.74 The CKMS design **shall** specify the methods used to verify the integrity of keys and/or metadata submitted for storage.

FR: 6.75 The CKMS design **shall** specify the methods used to protect the confidentiality of symmetric and private stored keys and metadata.

FR: 6.76 If a key-wrapping key (or key pair) is used to protect stored keys, then the CKMS design **shall** specify the methods used to protect the key-wrapping key (or key pair) and control its use.

FR: 6.77 The CKMS design **shall** specify the methods used to protect the integrity of stored keys and metadata.

FR: 6.78 The CKMS design **shall** specify how access to stored keys is controlled.

FR: 6.79 The CKMS design **shall** specify the techniques used for correcting or recovering all stored keys.

PR:6.58.		Before keys and metadata are stored, a Federal CKMS **shall** authenticate the identity and verify the authorization of the entity submitting keys and/or metadata for storage, and verify the integrity of the keys and metadata.
PR:6.59.		Only authorized entities **shall** be allowed access to stored keys and metadata in a Federal CKMS.

6.6 Cryptographic Key and Metadata Security: During Key Establishment

Keys and metadata can be established between entities needing to communicate securely using key transport or key agreement methods. These methods are typically used to establish keys over electronic communications networks, but some of these could also be used to provide extra security (i.e., beyond physical protection) when keys are manually distributed. [SP 800-56A] and [SP 800-56B] specify cryptographic schemes for automated key establishment.

6.6.1 Key Transport

When symmetric or private cryptographic keys and sensitive metadata are transported (distributed) from one entity (the sender) to others (the intended receivers), they must be protected. Symmetric keys and private keys require confidentiality protection, and all keys require integrity protection. A manually transported key can be physically protected by a trusted courier, while automated electronic-based transport must be protected using cryptography. NIST-approved methods for automated key transport are provided in [SP 800-56A] and [SP 800-56B].

The receivers of a transported key need assurance that the key came from the expected authorized key sender. When transported using automated methods, this assurance is typically provided by a cryptographic mechanism that authenticates the identity of the sender to the receiver; the FCKMS should verify the sender's authority to perform the

transport. When a key is transported manually, this assurance should be provided by authenticating the identity of the courier, and verifying the courier's authorization to transport the key.

FR: 6.80 The CKMS design **shall** specify the methods used to protect the confidentiality of symmetric and private keys during their transport.

FR: 6.81 The CKMS design **shall** specify the methods used to protect the integrity of transported keys and how the keys can be reconstructed or replaced after detecting errors.

FR: 6.82 The CKMS design **shall** specify how the identity of the key sender is authenticated to the receiver of transported keying material.

PR:6.60.		When keys and metadata are received, a Federal CKMS **shall** verify the identity and authorization of the source, the integrity of the received data and that confidentiality has been provided to secret and private keys and sensitive metadata.

6.6.2 Key Agreement

Two entities working together can create and agree on a cryptographic key without the key being transported from one entity to the other during an automated key-agreement process. Cryptographic algorithms employing key-agreement keys are used by each entity. NIST-approved methods for key agreement using public-key algorithms are provided in [SP 800-56A] and [SP 800-56B].

Each entity participating in a key-agreement process should obtain assurance of the identity of the other entity during the execution of that process.

FR: 6.83 The CKMS design **shall** specify each key agreement scheme supported by the CKMS.

FR: 6.84 The CKMS design **shall** specify how each entity participating in a key agreement is authenticated.

PR:6.61.		When keys and metadata are agreed-upon during an automated key-agreement process, a Federal CKMS **shall** obtain assurance of the identity of each party involved in the transaction.

6.6.3 Key Confirmation

When keys are established between two entities, each entity should confirm that the other entity did, in fact, establish the correct key. [SP 800-56A] and [SP 800-56B] specify key confirmation schemes for use in some automated key-establishment schemes. Other

methods may also be appropriate, such as decrypting ciphertext and comparing with the expected plaintext value.

FR: 6.85 The CKMS design **shall** specify each key confirmation method used to confirm that the correct key was established with the other entity.

FR: 6.86 The CKMS design **shall** specify the circumstances under which each key confirmation is performed.

PA:6.21.		A Federal CKMS **should** support key confirmation for all key-establishment transactions.

6.6.4 Key Establishment Protocols

Several protocols have been developed for the establishment of cryptographic keys. Often, these protocols are designed for a particular application or set of applications (e.g., secure email, secure data file transfer).

A high-level overview of several key-establishment protocols can be found in [SP 800-57-Part 3], along with guidance as to which cryptographic options are recommended for U.S. Government use.

FR: 6.87 The CKMS design **shall** specify all the protocols that are employed by the CKMS for key establishment and storage purposes.

PA:6.22.		When interoperability is required, a Federal CKMS **shall** support one or more **approved** key-establishment protocols.

6.7 Restricting Access to Key and Metadata Management Functions

Access to an FCKMS's key and metadata management functions should be supported for authorized entities and controlled to prevent unauthorized access to keys and metadata. An entity requesting an FCKMS service or initiating a cryptographic function should be authenticated, and that entity's authorization should be verified.

6.7.1 The Access Control System (ACS)

An access control system is needed by an FCKMS to assure that every key and metadata management function can only be initiated by the FCKMS itself or in response to a request by an authorized entity. When key-management functions are initiated by an entity, an access control system should assure that the initiator is authenticated, performing only the requested functions that are authorized, and that all applicable constraints are satisfied. See Section 6.7.1 of the Framework for additional discussion.

FR: 6.88 The CKMS design **shall** specify the topology of the CKMS by indicating the locations of the entities, the ACS, the function logic, and the connections between them.

FR: 6.89 The CKMS design **shall** specify the constraints on the key management functions that are implemented to assure proper operation.

FR: 6.90 The CKMS design **shall** specify how access to the key management functions is restricted to authorized entities.

FR: 6.91 The CKMS design **shall** specify the ACS and its policy for controlling access to key management functions.

FR: 6.92 The CKMS design **shall** specify at a minimum:

a) The granularity of the entities (e.g., person, device, organization),
b) If and how entities are identified,
c) If and how entities are authenticated,
d) If and how the entity authorizations are verified, and
e) The access control on each key management function.

FR: 6.93 The CKMS design **shall** specify the capabilities of its ACS to accommodate, implement, and enforce the CKMS Security Policy.

PR:6.62.		A Federal CKMS **shall** control access to, and the initiation of, all its key and metadata management services and functions, granting access to and permission to initiate a requested service or function only after verifying the identity and authorization of the requesting entity to perform the requested service or function.

6.7.2 Restricting Cryptographic Module Entry and Output of Plaintext Keys

An FCKMS should minimize human access to plaintext keys. The primary need for keys to be in plaintext is when they are performing cryptographic functions within a cryptographic module. A cryptographic module should provide physical protection and control physical access to the plaintext keys so that they cannot be replaced or disclosed while in the cryptographic module. Therefore, a major concern is the entry and output of plaintext secret and private keys into/from the cryptographic module.

Note that Section 6.4.19 addresses the entry of keys and metadata into a cryptographic module, and Section 6.4.20 addresses the output from the module.

FR: 6.94 The CKMS design **shall** specify the circumstances under which plaintext secret or plaintext private keys are entered into or output from a cryptographic module.

FR: 6.95 If plaintext secret or plaintext private keys are entered into or output from any cryptographic module, then the CKMS design **shall** specify how the plaintext keys are protected and controlled outside of the cryptographic module.

FR: 6.96 If plaintext secret or plaintext private keys are entered into or output from any cryptographic module, then the CKMS design **shall** specify how such actions are audited.

PR:6.63.		A Federal CKMS **shall** protect the integrity of all keys and their metadata, and the confidentiality of secret and private keys and their sensitive metadata when outside a cryptographic module.
PR:6.64.		When plaintext and secret keys are entered into or output from a cryptographic module, a Federal CKMS **shall** be capable of auditing the entry and output process.

6.7.3 Controlling Human Input

If a key-management function requires that a human input a key or sensitive metadata, the human must accept responsibility for the accuracy and security of the input, and entering the input at the proper time or when the proper event occurs. The FCKMS-initiated and controlled input and output of keys and/or sensitive metadata could be transparent to a user and possibly more secure.

FR: 6.97 For each key and metadata management function, the CKMS design **shall** specify all human input parameters, their formats, and the actions to be taken by the CKMS if they are not provided.

PA:6.23.		A Federal CKMS **should** minimize human involvement in entering and outputting keys and sensitive metadata to/from the FCKMS.

6.7.4 Multiparty Control

Certain FCKMS key-management functions could require multiparty control. Multiparty control could be provided by requiring *k* of *n* entities to be authenticated to and authorized by the FCKMS access-control system before the function is performed. Multiparty controls should be used when performing key-management functions for highly sensitive applications.

Of particular concern are the keys used by a Certificate Authority to sign certificates and any master keys used by the FCKMS to protect itself (e.g., the keys used to access other keys within the FCKMS, such as the keys used to protect a database of keys).

FR: 6.98 The CKMS design **shall** specify all functions that require multiparty control, specifying *k* and *n* for each function.

FR: 6.99 For each multiparty function, the CKMS design **shall** cite or specify any known rationale (logic, mathematics) as to why any *k* of the *n* entities can enable the desired function, but *k*-1 of the entities cannot.

PA:6.24.		A Federal CKMS **should** support multiparty control for managing and using Certificate Authority keys and FCKMS master keys.

PF:6.11.		A Federal CKMS **could** use multiparty control for Security Domain Authority functions.

6.7.5 Key Splitting

Key splitting should be used when multiparty control is used. When a highly sensitive key is required, *n* key splits should be generated so that any *k* of the key splits can be used to form the key, but having any *k*–1 key splits provides no knowledge about the key.

FR: 6.100 The CKMS design **shall** specify all keys that are managed using key splitting techniques and **shall** specify *n* and *k* for each technique.

FR: 6.101 For each (*n*, *k*) key splitting technique used, the CKMS design **shall** specify how key splitting is done, and any known rationale (logic, mathematics) as to why any *k* of the *n* key splits can form the key, but *k*-1 of the key splits provide no information about the key.

PA:6.25.		A Federal CKMS **should** support at least one key splitting scheme.

6.8 Compromise Recovery

An FCKMS should protect all keys and sensitive metadata so that they are not compromised or modified by unauthorized parties. However, since it is difficult to prevent all potential security problems against all threats, an FCKMS should be designed to detect potential compromises and unauthorized modifications, to mitigate their undesirable effects, to alert the appropriate parties of compromises, and to recover (or help recover) to a secure state if a compromise or unauthorized modification is discovered. This section addresses how to prepare for a possible key compromise and the steps required for recovery if a compromise occurs.

PR:6.65.		A Federal CKMS **shall** create and maintain a compromise-recovery plan for recovering from actual and suspected comprises of its security and availability.
PR:6.66.		A Federal CKMS **shall** perform the following when a compromise is detected or suspected: a) Evaluate the compromise to determine its cause and scope, b) Institute compromise-mitigation measures to minimize

		key and/or metadata exposure, c) Institute corrective measures to prevent the recurrence of the compromise, and, d) Return the FCKMS to a secure operating state.

6.8.1 Key Compromise

Key compromise is the unauthorized disclosure or use of a cryptographic key or its sensitive metadata to one or more unauthorized entities. Depending on the key type and key usage, the compromise of a key could result in:

a) Loss of confidentiality,
b) Loss of integrity,
c) Loss of authentication,
d) Loss of non-repudiation, or
e) Some combination of these losses.

Note that a compromise of a secret or private key could result in a compromise of all the information protected by the key and access to all security services supported by the key. Also, note that the compromise of the sensitive metadata of a key may result in the compromise of the key (see Section 6.8.2).

A key compromise could be prevented, undetected, detected, or suspected. An FCKMS should be designed and operated to 1) prevent key compromises, 2) detect actual compromises, 3) support the analysis of suspected compromises, and 4) minimize the risks of undetected compromises. The latter can be assisted by establishing a cryptoperiod, or usage limit, for each key[8]. See Section 6.8.1 of the Framework for additional discussion.

A cryptographic key may be used for applying cryptographic protection (e.g., encryption or generating a digital signature) or processing cryptographically protected information (e.g., decryption or verifying a digital signature). For symmetric algorithms, the same key is used both to apply the protection and process the protected information. For public-key algorithms, one key of a key pair is used to apply the protection, and the other is used to process the protected information; for public-key algorithms, key compromise is concerned with disclosure or modification of the private key of the key pair. Keys known or suspected of being compromised must not be used to apply cryptographic protection, but they may be used to process cryptographically protected information, if required (e.g., for continuity of operations).

An FCKMS should have the ability to rapidly revoke a key (see Section 6.8.3), replace keys (both asymmetric and symmetric) and the ability to notify the relying parties (those who make use of the key) of a compromise.

[8] The usage of keys may be limited based on a criterion, such as the amount of data processed using the key or the number of times the algorithm was initialized using the key.

FR: 6.102 The CKMS design **shall** specify the range of acceptable cryptoperiods or usage limits of each type of key used by the system.

FR: 6.103 For each key, a CKMS design **shall** specify the other key types that depend on the key for their security and how those dependent keys are to be replaced in the event of a compromise of the initial key.

FR: 6.104 The CKMS design **shall** specify the means by which other compromised keys can be identified when a key is compromised. For example, when a key derivation key is compromised, how are the derived keys determined?

PR:6.67.		A Federal CKMS **shall** revoke compromised keys.
PR:6.68.		A Federal CKMS **shall not** use a key whose compromise is known or suspected to apply cryptographic protection.

PA:6.26.		A Federal CKMS **should** destroy compromised.
PA:6.27.		A Federal CKMS **should** replace compromised/revoked keys with new keys and metadata when continuity of operations is required.
PA:6.28.		A Federal CKMS **should not** use a key whose compromise is known or suspected to process cryptographically protected information.

6.8.2 Metadata Compromise

Some metadata may be considered sensitive, while other metadata is not. Metadata compromise refers only to the compromise of the sensitive metadata. Depending on the metadata element and how it is used, its compromise could result in the compromise of one or more keys and the data protected by those keys. If different keys have common sensitive metadata elements, then the compromise of one sensitive metadata element may compromise the data protected by each of the keys. Metadata elements that are sensitive to disclosure or unauthorized modification should be cryptographically bound to their associated keys so that the integrity of the metadata can be easily verified. Metadata elements that are sensitive to disclosure should be physically or cryptographically protected.

FR: 6.105 For each key type employed, the CKMS design **shall** specify which metadata elements are sensitive to compromise (confidentiality, integrity, or source).

FR: 6.106 The CKMS design **shall** specify the potential security consequences, given the compromise (confidentiality, integrity or source) of each sensitive metadata element of a key.

FR: 6.107 The CKMS design **shall** specify how each sensitive metadata element compromise can be remedied.

PR:6.69.		A Federal CKMS **shall** revoke the key associated with compromised sensitive metadata.
PR:6.70.		A Federal CKMS **shall** support reporting and investigating a compromise of sensitive metadata.

PR:6.71.		A Federal CKMS **should** destroy the keys whose sensitive metadata has been compromised, and also destroy all the metadata associated with that key.

6.8.3 Key and Metadata Revocation

Keys could be revoked for a number of reasons, including key compromise, metadata compromise, and the termination of an employee or the employee's role within an organization. Additional information is provided in Section 6.8.3 of the Framework.

FR:6.108 A CKMS design **shall** specify the key revocation mechanism(s) and associated relying entity notification mechanism(s) used or available for use.

PR:6.72.		A Federal CKMS **shall** provide a notification when a key is revoked, including the reason for the revocation.

6.8.4 Cryptographic Module Compromise

Since a cryptographic module contains plaintext keys at some point during its operation, physical access to, and compromise of, a cryptographic module could compromise the symmetric and private keys contained within the module, as well as any sensitive metadata contained in the module. This could lead to the loss of confidentiality and/or integrity of the keys and metadata.

Cryptographic modules could be compromised either physically (i.e., obtaining keys from within the module enclosure) or by non-invasive methods (i.e., obtaining keys, or knowledge about the keys via some external action). Physical protection could be provided to the modules by enclosing them in a facility or a protected space where unauthorized access is prevented or where unauthorized access could be quickly detected. Some modules provide this protection at their cryptographic boundary (see [FIPS 140]). If any access to the contents of a cryptographic module is possible, then an access control system should restrict access to authorized parties.

Following an actual or suspected cryptographic module compromise, a secure state of the module should be re-established before the module is returned to normal operation.

Following repair or replacement, the security and correct operation of a module should be tested and approved before it becomes operational.

FR: 6.109 The CKMS design **shall** specify how physical and logical access to the cryptographic module contents is restricted to authorized entities.

FR: 6.110 The CKMS design **shall** specify the approach to be used to recover from a cryptographic module compromise.

FR: 6.111 The CKMS design **shall** describe what non-invasive attacks are mitigated by the cryptographic modules used by the system and provide a description of how the mitigation is performed.

FR: 6.112 The CKMS design **shall** identify any cryptographic modules that are vulnerable to non-invasive attacks.

FR: 6.113 The CKMS design **shall** provide the rationale for accepting the vulnerabilities caused by possible non-invasive attacks.

A CKMS must use cryptographic modules that protect against unauthorized access to their contents (see Section 2.10 for requirements). Physically compromised cryptographic modules must be replaced. A CKMS must control physical access to all its devices, modules, and cryptographic modules (see Section 6.8.8 for requirements).

PR:6.73.		A Federal CKMS **shall** repair or replace a compromised cryptographic module and then verify its correct operation and security before it is returned to operational status.

6.8.5 Computer System Compromise Recovery

The security of an FCKMS often depends on the security and integrity of its own computer systems, including its hardware, software, and data. Unauthorized access to, or modifications of, any of these could corrupt its secure operation. Unauthorized modification of FCKMS software or of a computer's operating system could be detected using tools that run on a separate secure platform and monitoring any unauthorized modification to a file, changes to the hash value of a file's contents, or changes to a file's attributes. Alternatively, a layered system of protections could be built into the system; in this case, the mechanisms would need to be protected from the same threats as the system itself. When critical files undergo unauthorized modifications that are detected by the monitor or are indicated in the event log, then these files should be replaced with known valid and secure files obtained from secure storage.

An FCKMS could incorporate automated monitoring devices and software that detect certain threats or compromises. For example, some communication networks monitor for and detect errors that accidentally occur or have been induced in the network. If a

network uses error-detection codes for communications, the monitor could detect error propagation characteristics that are outside the norm and initiate some compensating action to minimize the result of this type of compromise. If cryptographic-based Message Authentication Codes (MACs) are used on communications, both deliberate and accidental modification to the data (e.g., keys and metadata) could be detected. Automated induced error-detection systems can detect some, but not all, such unauthorized security network activity.

FR: 6.114 The CKMS design **shall** specify the mechanisms used to detect unauthorized modifications to the CKMS system hardware, software and data.

FR: 6.115 The CKMS design **shall** specify how the CKMS recovers from unauthorized modifications to the CKMS system hardware, software and data.

PR:6.74.		A Federal CKMS **shall** support replacing modified system software with valid backup copies after the detection of an unauthorized modification to any of its computer system's software.
PR:6.75.		A Federal CKMS **shall** support reporting any detected or suspected computer operating-system compromise to FCKMS management, installing any available upgrades that prevent recurrence of the compromise, and performing system tests to verify that the problem that caused the compromise has been fixed.

PF:6.12.		A Federal CKMS **could** automatically detect and report some compromise types, obtain upgrades that will deter or prevent similar future compromises, and then return the system to a known secure state.

6.8.6 Network Security Controls and Compromise Recovery

A compromise of any network security control that provides protection to the communications within an FCKMS could result in the compromise of the FCKMS itself, including its keys. See Section 6.8.6 of the Framework for additional information.

Whenever network security has been compromised, the incident should be fully investigated to determine what other systems and what keys may have been compromised due to the compromise of the network.

FR: 6.116 The CKMS design **shall** specify how to recover from the compromise of the network security control used by the system. Specifically,

a) The CKMS design **shall** specify the compromise scenarios considered for each network security control device,

b) The CKMS design **shall** specify which of the mitigation techniques specified in this section are to be employed for each envisioned compromise scenario, and
c) The CKMS design **shall** specify any additional or alternative mitigation techniques that are to be employed.

PR:6.76.		If administration keys are compromised, a Federal CKMS **shall** replace the keys.
PR:6.77.		If the security of a network security-control device has been compromised, a Federal CKMS **shall:** a) Repair or replace the device, b) Test the repaired or replaced device, and c) Return the FCKMS to a secure state after the tests are passed and before returning to an operational state.
PR:6.78.		If network passwords are compromised, a Federal CKMS **shall:** a) Replace any passwords that are compromised or suspected of being compromised, b) Notify entities that may be affected by the compromise. c) Perform an assessment of any damage that could have resulted to the FCKMS, d) Take corrective actions that would reduce the likelihood of similar failures.

PA:6.29.		If the network architecture is violated, a Federal CKMS **should:** a) Investigate the cause of the violation, b) Report the violation to the CKMS designer, and c) Use different or revised protocols and protection mechanisms, if possible.
PA:6.30.		If the platform operating system or a network application is compromised, a Federal CKMS **should** take one or more of the following actions: a) Make sure that all the latest operating system security patches are installed, b) Ask the operating-system vendor if there is a patch for the compromise, and/or c) Determine if a device configuration change or the blocking of some protocols will prevent future attacks of the same nature as the one that resulted in the compromise.

PA:6.31.		If the compromise is due to an inadequate network security protocol, a Federal CKMS **should** take one or more of the following actions: a) Ask the network-security application vendor if there is a patch for the compromise, and/or b) Determine if a device configuration change or the blocking of certain protocols will prevent future attacks of the same nature as the one that caused the compromise.
PA:6.32.		When network security controls are compromised, a Federal CKMS **should**: a) Assess the cause and extent of the compromise, b) Take corrective actions that are recommended by the security-control vendor, and c) Replace all keys and sensitive metadata that have, or could have, been compromised.
PA:6.33.		A Federal CKMS **should** take corrective measures for network security compromises, including: a) Installing the latest network security patches, b) Changing network security devices if improved ones are available, c) Upgrading network security configurations, and d) Disabling protocols with known or suspected security flaws.
PA:6.34.		A Federal CKMS **should** determine if other FCKMSs have been compromised as the result of a network security-control compromise and recommend to their managers that they initiate appropriate recovery procedures.

6.8.7 Personnel Security Compromise Recovery

Anyone that is responsible for the secure operation of an FCKMS might have the capability to compromise its security. An FCKMS should be designed and operated with the capabilities to minimize the likelihood of any successful human-initiated compromise, and detect, minimize the negative consequences and efficiently recover from such compromises.

Any detected security failure should result in the initiation of recovery procedures based upon the Information Security Policy and the FCKMS capabilities.

FR: 6.117 The CKMS design **shall** specify any personnel compromise detection features that are provided for each supported role.

FR: 6.118 The CKMS design **shall** specify any personnel compromise minimization features that are provided for each supported role.

FR: 6.119 The CKMS design **shall** specify the CKMS compromise recovery capabilities that are provided for each supported role.

PR:6.79.		A Federal CKMS **shall** perform an assessment of the potential consequences of personnel security compromises before the FKCMS initially becomes operational.
PR:6.80.		A Federal CKMS **shall** develop procedures for recovering from a personnel security compromise.
PR:6.81.		A Federal CKMS **shall** perform an audit of its personnel security actions after a personnel security compromise is detected, and issue revisions to the FCKMS operations documentation that would reduce similar compromises.

PA:6.35.		A Federal CKMS **should**: a) Minimize the ability of any of its management personnel to cause a security failure, b) Minimize the ability of these personnel to hide their actions that caused a security failure, c) Maintain audit records that aid in determining who or what caused the security failure, and d) Mitigate the negative consequences of the failure.
PA:6.36.		A Federal CKMS **should** perform an audit of personnel security actions when a personnel security compromise is suspected, and issue revisions to operations manuals that would reduce such future compromises.
PA:6.37.		A Federal CKMS **should** provide annual security training to each of its management personnel, and require each to affirm that they have read and will follow the security policies and procedures of the FCKMS.
PA:6.38.		A Federal CKMS **should** perform the following after detecting an actual or probable compromise of security: a) Shut down the compromised system, b) Activate a backup facility and system with new keys or uncompromised keys, c) Notify current and potential users of the possible security failure, and d) Revoke compromised keys.

6.8.8 Physical Security Compromise Recovery

Physical security should be used to both prevent and detect security compromises. In addition to the disclosure or destruction of keys, a physical security breach of an FCKMS module could result in compromises to the integrity of any of its internal components. A cryptographic module may be designed with adequate physical protections, but if security-related logic resides outside of the cryptographic module, then the integrity of that logic also needs protection. Techniques similar to those used by the cryptographic module should be employed. An FCKMS should support both prevention and detection mechanisms against physical compromises.

If the physical security of an FCKMS module is breached, all sensitive data within the breached area should be suspected of being compromised. The FCKMS components associated with the FCKMS module should be examined to detect any unauthorized modification or replacement. Compromised components should be repaired or replaced to prevent new keys and sensitive information from being compromised in the future.

FR: 6.120 The CKMS design **shall** specify how all CKMS components and devices are protected from unauthorized physical access.

FR: 6.121 The CKMS design **shall** specify how the CKMS detects unauthorized physical access.

FR:6.122 The CKMS design **shall** specify how the CKMS recovers from unauthorized physical access to components and devices other than cryptographic modules.

FR:6.123 The CKMS design **shall** specify the entities that are automatically notified if a physical security breach of any CKMS component or device is detected by the CKMS.

FR:6.124 The CKMS design **shall** specify how breached areas can be re-established to a secure state.

PR:6.82.		A Federal CKMS **shall** support the notification of an appropriate authority of any actual or suspected physical-security compromise and initiating mitigation actions by that authority.
PR:6.83.		A Federal CKMS **shall** control physical access to FCKMS devices and restrict access to only authorized entities.
PR:6.84.		A Federal CKMS **shall** support the evaluation of each new individual before being authorized to perform a role involving the recovery from a security compromise.

PF:6.13.		A Federal CKMS **could** support a multi-factor physical access control of all personnel having possible access to an

		FCKMS and its components.

7. Interoperability and Transitioning

7.1 Interoperability and Transitioning

Interoperability is the ability of diverse systems to communicate and work together (i.e., inter-operate). Interoperability can only be achieved by having a detailed specification to which an FCKMS intends to operate.

An FCKMS that supports interoperability must support at least one algorithm of each required type with an appropriate key length. The use of **approved** algorithms and key lengths other than the selected defaults is permitted if communicating entities agree.

An FCKMS should use cryptographic algorithms and keys whose security lifetimes will span its anticipated lifetime and that of the information being protected, and whose security strengths are appropriate for the target information to be protected. If the FCKMS is intended to remain in service beyond the security lifetimes of its cryptographic algorithms, then there should be a transition strategy for migration to stronger algorithms in the future. Cryptographic algorithms should be implemented so that they can be replaced when needed. [SP 800-57-1] and [SP 800-131A] specify NIST-recommended lifetimes of NIST-approved cryptographic algorithms. [SP 800-57-1] provides transition guidance.

FR:7.1 The CKMS design **shall** specify how interoperability requirements across device interfaces are to be satisfied.

FR:7.2 The CKMS design **shall** specify the standards, protocols, interfaces, supporting services, commands and data formats required to interoperate with the applications it is intended to support.

FR:7.3 The CKMS design **shall** specify the standards, protocols, interfaces, supporting services, commands and data formats required to interoperate with other CKMS for which interoperability is intended.

FR:7.4 The CKMS design **shall** specify all external interfaces to applications and other CKMS.

FR:7.5 The CKMS design **shall** specify all provisions for transitions to new, interoperable, peer devices.

FR:7.6 The CKMS design **shall** specify any provisions provided for upgrading or replacing its cryptographic algorithms.

FR:7.7 The CKMS design **shall** specify how interoperability will be supported during cryptographic algorithm transition periods.

FR:7.8 The CKMS design **shall** specify its protocols for negotiating the use of cryptographic algorithms and key lengths.

PR:7.1.		When interoperability is required, and a symmetric block-cipher algorithm is to be used for encryption, a Federal CKMS **shall** support AES-128 in the CBC mode for Low and Moderate impact levels, and AES-256 in the CBC mode for High impact levels, as specified in [FIPS 197] and [SP 800-38A], as the default method.
PR:7.2.		When interoperability is required, and a symmetric block-cipher algorithm is to be used for message authentication only, a Federal CKMS **shall** support AES-128 in the CMAC mode for Low and Moderate impact levels, and AES-256 in the CMAC mode for High impact levels, as specified in [FIPS 197] and [SP 800-38B], as the default method.
PR:7.3.		When interoperability is required, and a symmetric block-cipher algorithm is to be used for authenticated encryption, a Federal CKMS **shall** support AES-128 in the GCM mode for Low and Moderate impact levels, and AES-256 in the GCM mode for High impact levels, as specified in [FIPS 197] and [SP 800-38D], as the default method.
PR:7.4.		When interoperability is required, and a symmetric block-cipher algorithm is to be used for key wrapping, a Federal CKMS **shall** support AES-128 in the GCM mode for Low and Moderate impact levels, and AES-256 in the GCM mode for High impact levels, as specified in [FIPS 197] and [SP 800-38D], as the default method.
PR:7.5.		When interoperability is required, and a hash function is to be used, an FCKMS **shall** support SHA-256 for Low and Moderate impact levels, and SHA-384 for High impact levels, as specified in [FIPS 180], as the default hash function.
PR:7.6.		When interoperability is required, and HMAC is to be used, a Federal CKMS **shall** support HMAC-SHA-1 for Low impact levels, HMAC-SHA-256 for Moderate impact levels, and HMAC-SHA-384 for High impact levels, as specified in [FIPS 198] and [FIPS 180], as the default.
PR:7.7.		When interoperability is required, and an interactive, finite-field key-agreement scheme is to be used for key

		establishment, a Federal CKMS **shall** support the dhEphem scheme specified in [SP 800-56A] as the default scheme, with the concatenation KDF employing SHA-256 as the default key-derivation method for Low and Moderate impact levels, and SHA-384 for High impact levels.
PR:7.8.		When interoperability is required, and an interactive, elliptic-curve key-agreement scheme is to be used for key establishment, a Federal CKMS **shall** support the Ephemeral Unified Model scheme specified in SP 800-56A with curve P-256 as the default scheme, with the concatenation KDF employing SHA-256 as the default key-derivation method for Low and Moderate impact levels, and curve P-384 and SHA-384 for High impact levels.
PR:7.9.		When interoperability is required, an RSA scheme is to be used for key agreement, and both participants are to use key pairs during the transaction, a Federal CKMS **shall** support the KAS2 scheme from [SP 800-56B], with the concatenation KDF employing SHA-256 as the default key-derivation method for Low and Moderate impact levels, and SHA-384 for High impact levels.
PR:7.10.		When interoperability is required, and a one-way (e.g., store-and-forward), finite-field key-agreement scheme is to be used for key establishment, a Federal CKMS **shall** support the dhOneFlow scheme specified in [SP 800-56A] as the default scheme, with the concatenation KDF employing SHA-256 as the default key-derivation method for Low and Moderate impact levels, and SHA-384 for High impact levels.
PR:7.11.		When interoperability is required, and a one-way (e.g., store-and-forward), elliptic-curve key-agreement scheme is to be used for key establishment, a Federal CKMS **shall** support the One-pass Diffie-Hellman scheme specified in [SP 800-56A] with curve P-256 as the default scheme, with the concatenation KDF employing SHA-256 as the default key-derivation method for Low and Moderate impact levels, and curve P-384 and SHA-384 for High impact levels.
PR:7.12.		When interoperability is required, an RSA key agreement scheme is to be used for key establishment, and only the initiator's key is to be used during the transaction, a Federal CKMS **shall** support the KAS1 scheme specified in [SP 800-56B] as the default scheme, with the concatenation KDF employing SHA-256 as the default key-derivation method for Low and Moderate impact levels, and SHA-384 for High

		impact levels..
PR:7.13.		When interoperability is required, and an RSA key-transport scheme is to be used for key establishment, a Federal CKMS **shall** support the RSA-OAEP scheme specified in [SP 800-56B] as the default scheme. Note to the reader: While PKCS v1.5 is commonly used, it is not among the schemes that are NIST-approved in 800-56B.
PR:7.14.		When interoperability is required, and key derivation from a pre-shared secret is to be performed, a Federal CKMS **shall** support HMAC in counter mode as specified in [SP 800-108] as the default method, using SHA-256 as the hash function for Low and Moderate impact levels, and SHA-384 for High impact levels.
PR:7.15.		When interoperability is required, and digital signature generation and verification is to be performed using ECDSA, a Federal CKMS **shall** support curve P-256 as the default curve and SHA-256 as the default hash function to be used for Low and Moderate impact levels, and curve P-384 and SHA-384 for High impact levels.
PR:7.16.		When interoperability is required, and digital signature generation and verification is to be performed using RSA, a Federal CKMS **shall** support the RSASSA-PSS signature scheme as the default scheme.
PR:7.17.		A CKMS **shall** use only cryptographic algorithms whose security lifetimes extend up to or beyond the anticipated lifetime of the FCKMS itself and the information that it protects, or have a transition strategy for migration to stronger algorithms and longer key lengths in the future.
PR:7.18.		A Federal CKMS **shall** maintain and use transition plans that include the selection and use of cryptographic algorithm(s) and key length(s) to be used during a transition period.

The following recommendations (i.e., **PA**s) specify algorithms and key lengths that could be available to increase the security strength of cryptographic protection, and algorithm and key length flexibility.

PA:7.1.		When interoperability is required, and a symmetric block cipher algorithm is to be used for encryption, a Federal CKMS **should** include support for AES-256 in the CBC mode, as specified in [FIPS 197] and [SP 800-38A].

PA:7.2.		When interoperability is required, and a symmetric block-cipher algorithm is to be used for message authentication only, a Federal CKMS **should** include support for AES-256 in the CMAC mode, as specified in [FIPS 197] and [SP 800-38B].
PA:7.3.		When interoperability is required, and a symmetric block-cipher algorithm is to be used for authenticated encryption, a Federal CKMS **should** include support for AES-256 in the GCM mode, as specified in [FIPS 197] and [SP 800-38D].
PA:7.4.		When interoperability is required, and a symmetric block-cipher algorithm is to be used for key wrapping, a Federal CKMS **should** include support for AES-256 in the GCM mode, as specified in [FIPS 197] and [SP 800-38D].
PA:7.5.		When interoperability is required, and a hash function is to be used, a Federal CKMS **should** include support for SHA-384, as specified in [FIPS 180].
PA:7.6.		When interoperability is required, and HMAC is to be used, a Federal CKMS **should** include support for HMAC-SHA-256 and HMAC-SHA-384, as specified in [FIPS 198] and [FIPS 180].
PA:7.7.		When interoperability is required, and a key-agreement scheme is to be used, a Federal CKMS **should** include support for SHA-384 for use by the key-derivation method.
PA:7.8.		When interoperability is required, and an elliptic-curve key-agreement scheme is to be used, a Federal CKMS **should** include support for curve P-384.
PA:7.9.		When interoperability is required, and an RSA key-transport scheme is to be used, a Federal CKMS **should** include support for the RSA-KEM-KWS schemes specified in [SP 800-56B] with the KWP key-wrapping method.
PA:7.10.		When interoperability is required for ECDSA digital signature generation and verification, a Federal CKMS **should** include support for curve P-384.
PA:7.11.		A Federal CKMS **should** support the update or replacement of cryptographic algorithms, and do so in a manner that does not significantly impact FCKMS operations.

The following table includes suggested enhancements to an FCKMS.

PF:7.1.		When interoperability is required, a Federal CKMS **could** support SHA-512 and the SHA-3 family as additional hash functions.
PF:7.2.		When interoperability is required, a Federal CKMS **could** support HMAC using SHA-512 and the SHA-3 family of hash functions.
PF:7.3.		When interoperability is required, and a key-agreement scheme is to be used a Federal CKMS **could** support the C (2e, 2s) DH and MQV schemes in [SP 800-56A].
PF:7.4.		A Federal CKMS **could** implement provisions that support transitions to new algorithms or key lengths. Such provisions include: a) Common interfaces, b) Common formats for keys, metadata, and associated protection mechanisms, c) Common procedures for cryptographically associating (e.g., binding) metadata to their keys, and d) Cryptographic algorithms that can be replaced, when needed.

8. Security Controls

An FCKMS consists of one or more computer systems, communication services, devices, FCKMS modules, cryptographic modules, firewalls, communications and human interfaces, backup storage media, archive facilities, network security protocols, and entity identification systems. An FCKMS requires security mechanisms and management to protect these components, along with the keys and metadata that they contain. These controls include physical security controls, operating system and device security controls, auditing and remote monitoring, network security controls and cryptographic module controls.

8.1 Physical Security Controls

Physical security is needed to protect the availability, reliability, and integrity of an FCKMS and to ensure the security and availability of its data-processing resources, including all key-management information and support software. Without good physical security, the FCKMS hardware and software could be modified to negate or bypass security mechanisms.

An FCKMS may include facilities that provide third-party key-management services (such as a Certification Authority, Key Distribution Center, Registration Authority, or Certificate Directory) and end-to-end communication devices (such as personal computers, personal digital assistants, smart phones, and intelligent sensing devices. A facility is traditionally considered to be a building or room that houses equipment and

support personnel in a fixed or "static" facility/environment. However, in today's world of mobile "smart" devices, the definition of a facility needs to be expanded to include the enclosure in which a mobile FCKMS module is contained (e.g., a computer laptop case, or cell phone protective cover) and protected by its owner/user. A mobile device enclosure and the person carrying the enclosed device should provide the protection that is equivalent to that available in a static facility and environment. In some instances, an FCKMS could encompass a variety of static and mobile facilities.

In a static environment, an FCKMS module could be protected by gated fences, locked doors, smart-card access-control systems, password verifiers, surveillance cameras, and guards. In a mobile environment, security will depend on the room or enclosure in which the mobile device and FCKMS module are currently operating, the person operating the mobile device, and perhaps a personal identity-verification (PIV) mechanism that is built into the device that requires an authorized owner/user to enter a special access token, secret password, and/or personal biometric characteristic (e.g., fingerprint).

FR: 8.1 The CKMS design **shall** specify each of its CKMS devices and their intended purposes.

FR: 8.2 The CKMS design **shall** specify the physical security controls for protecting each device containing CKMS components.

PR:8.1.		A Federal CKMS **shall** support the physical protection of FCKMS modules, cryptographic modules, components, devices, and unencrypted keys and sensitive metadata.

8.2 Operating System and Device Security Controls

This section addresses security controls for FCKMS computer operating systems and devices. Note that an FCKMS module or device that incorporates a general-purpose operating system should also have computer security controls.

8.2.1 Operating System Security

A secure operating system should be the foundation of every modern, shared computing system, personal computer, and "smart" device. Without a secure operating system, the security of the control programs, applications, and data on these personal devices cannot be assured. Section 8.2.1 of the Framework provides guidance on the security features that should be provided in secure operating systems. A secure operating system depends on a "trusted" hardware platform running secure software. A trusted hardware platform often supports two or more physically or logically separated processing capabilities in order to isolate keys, metadata, security services, and cryptographic functions according to their impact levels, applications, users, or domain security policies.

An FCKMS module might run on a general-purpose computer where non-validated code is permitted. For example, users could be allowed to run their own non-validated

software applications. In such cases, a trusted or secure operating system should be used to protect sensitive code and data from the non-validated code. The operating system should separate itself from all applications and should separate applications from each other. A trusted operating system is designed to provide these separations and has been evaluated and deemed to be "trusted" to do so. The trusted system, including the hardware base and the operating system, can be trusted to enforce two or more states in order to support privileged operations, such as memory management, I/O management, and secure cryptographic function calls.

Software integrity in an FCKMS must be maintained to prevent unauthorized disclosure and modification of the keys and metadata. This may be supported by using mechanisms such as hash functions, message authentication codes, and digital signatures, all of which can be used to detect any modification to the software. Software integrity should be verified when the software is received from its supplier, after initial installation, upon system startup, and periodically thereafter.

FR: 8.3 The CKMS design **shall** specify all secure operating system requirements (including any required operating system configurations) for each CKMS device.

FR:8.4 The CKMS design **shall** specify which of the following hardening[9] features are enforced by the CKMS:

a) Removing all non-essential software programs and utilities from the computer;
b) Using the principle of least privilege to control access to sensitive system features and applications;
c) Using the principle of least privilege to control access to sensitive system and application files and data;
d) Limiting user accounts to those needed for legitimate operations, i.e., disabling or deleting the accounts that are no longer required;
e) Running the applications with the principle of least privilege;
f) Replacing all default passwords and keys with strong passwords and randomly generated keys, respectively;
g) Disabling or removing network services that are not required for the operation of the system;
h) Disabling or removing all other services that are not required for the operation of the system;
i) Disabling removable media, or disabling automatic run features on removable media and enabling automatic malware checks upon media introduction;
j) Disabling network ports that are not required for the system operation;
k) Enabling optional security features as appropriate; and

[9] Hardening is the process used to eliminate a means of attack by patching vulnerabilities and turning off nonessential services.

l) Selecting other configuration options that are secure.

FR:8.5: The CKMS design **shall** specify the BIOS protection features that ensure the proper instantiation of the operating system.

PR:8.2.		A Federal CKMS **shall** support the following hardening principles: a) The removal of non-essential software from computers, b) Limiting users and their access privileges to those needed for essential operations, c) Replacing default passwords and keys with strong passwords and randomly generated keys, respectively, d) Disabling or removing non-essential network services, e) Disabling or removing non-essential services of the FCKMS, f) Disabling non-essential, removable data storage media or automatic run features on removable media, g) Enabling automatic malware checks when a new data-storage medium is attached to an FCKMS, and h) Disabling non-essential network ports.
PR:8.3.		A Federal CKMS **shall** maintain software integrity.
PR:8.4.		A Federal CKMS **shall** protect access to sensitive keys and metadata by non-validated software.

PA:8.1.		A Federal CKMS **should** verify the integrity of its software during system startup.
PA:8.2.		A Federal CKMS **should** use trusted operating systems that separate sensitive user applications from each other and from the operating system.
PA:8.3.		A Federal CKMS **should** provide multi-person control of those system functions that are considered by the FCKMS management authorities to be most critical to the security provided by the FCKMS.

PF:8.1.		A Federal CKMS **could** use trusted operating systems in FCKMS modules and components to provide: a) Capabilities for defining and managing logical operating system compartments in order to separate and protect one user, application, or domain from another, b) Capabilities for defining a policy or set of rules for

		protecting the information within each compartment and providing protection that satisfies the policy or rules, c) Capabilities for communicating with several other FCKMS modules simultaneously and assuring that all communications are received by the correct compartment, d) Capabilities for assuring that only those entities authorized to access keys and metadata during a certain period of time are able to do so, and e) Capabilities for ensuring that each entity providing an identifier is the entity authorized to provide and use it.

8.2.2 Individual CKMS Device Security

An FCKMS may consist of a variety of devices. An FCKMS should be designed to protect itself from FCKMS device users and other FCKMS devices, provide separate sessions for users and user processes, provide fine-grained access controls on FCKMS device-level objects, provide device-level security-event logging, and provide user account management.

A verification that an FCKMS device is operating correctly and securely should be established at device startup and verified periodically. The security controls incorporated into an FCKMS device could be configurable to support differences in FCKMS service-using organizations, security policies, and environments. Specific security-relevant events (such as a physical security alarm, electric power failure, unrecoverable communication errors, and human-initiated alarms) could result in different responses, depending on these differences.

FR:8.6 The CKMS design **shall** specify the security controls required for each CKMS device.

FR:8.7 The CKMS design **shall** specify the device/CKMS secure configuration requirements and guidelines that the hardening is based upon.

PR:8.5.		During system startup, a Federal CKMS **shall** verify that each of its devices is operating correctly and in a secure state.

PF:8.2.		A Federal CKMS device **could** be manually configurable to support differences in the needs of FCKMS service-using organizations, their policies and their environments.
PF:8.3.		A Federal CKMS device **could** be automatically configurable to support, comply with, and enforce new domain security policies.

8.2.3 Malware Protection

An FCKMS that receives operating system software, software upgrades, and software support over unprotected electronic communication networks or via untrusted manual software distribution services should scan these items and all received FCKMS control and support software for malware unless the integrity of the software is verified as being correctly and securely cryptographically sealed (e.g., with a MAC or digital signature), and authenticated as coming from a known and trusted source.

Malware protection falls into the following three general categories:

a) Anti-virus software that protects an FCKMS and its components from installing and executing programs that modify or reproduce themselves without authorization, sending copies of modified versions of themselves to other components, performing unintended and unauthorized actions, and, in general, causing a security compromise;

b) Anti-spyware software that protects an FCKMS and its components from an unauthorized party obtaining system administrator status or authorized user status, collecting unauthorized information from other parts of the FCKMS, and taking on unauthorized FCKMS component behavior; and,

c) Rootkit detection and prevention software that protects an FCKMS and its devices from rootkit malware that makes unauthorized changes to the configuration settings of the operating system, and hides unauthorized changes to the FCKMS operating system software, processes, and files, including the rootkit code itself, from anti-virus and anti-spyware software.

In order to be effective, malware protection should include verifying the identity of the source of the received software upon receipt, and scanning the software for malware upon initial receipt and periodically thereafter (e.g., upon reloading).

FR:8.8 The CKMS design **shall** specify the following malware protection capabilities for CKMS devices:

a) Anti-virus protection software, including the specified time periods and events that trigger anti-virus scans, software update, and virus signature database updates;
b) Anti-spyware protection software, including the specified time periods and events that trigger anti-spyware scans, software update, and virus signature updates; and
c) Rootkit detection and protection software, including the specified time periods and events that trigger rootkit detection, software update, and signature updates.

FR:8.9 The CKMS design **shall** specify the following software integrity check information for operating system and CKMS application software:

a) If software integrity is verified upon installation, indicate how the verification is performed; and

b) If software integrity is verified periodically, indicate how often the verification is performed.

PR:8.6.		A Federal CKMS **shall** support the following malware protection capabilities for itself and its devices**:** a) Anti-virus protection software, b) Anti-spyware protection software, and c) Rootkit detection and protection software.
PR:8.7.		A Federal CKMS **shall**: a) Verify the source and authenticity of a software update before loading it, and b) Verify that the updated software contains no malware before running it.

PA:8.4.		A Federal CKMS **should** support configurable, dynamic network malware monitoring.
PA:8.5.		A Federal CKMS **should** be configured to perform: a) A weekly scan of installed software, b) A scan of removable media when first introduced into the CKMS, c) A scan of newly installed software and data files, d) A weekly update of the malware protection software, and e) A weekly update of the malware signature database.
PA:8.6.		A Federal CKMS **should** perform the following to detect and mitigate malware: a) Obtain and use known-malware databases to determine current risks, b) Scan received keys and metadata when first received, and c) Verify the integrity of security software and their databases.
PA:8.7.		A Federal CKMS **should** support time-initiated and event-initiated malware scanning.
PA:8.8.		A Federal CKMS **should** verify its software integrity after initial installation, update installation, system power-on, and then daily thereafter.

PF:8.4.		A Federal CKMS **could** support dynamic network malware monitoring and report any identified real or potential problems to the FCKMS management personnel.

8.2.4 Auditing and Remote Monitoring

An FCKMS should monitor security-relevant events by detecting and recording security-relevant events in an audit log. The audit capability should also have the ability to detect any unusual events that should be investigated and report them to the audit administrator role as soon as possible. The audit capability and audit log should be protected from unauthorized modification so that the integrity of the audit system can be assured.

Automated assessment tools, such as those specified in the Security Content Automation Protocol (SCAP) (see [SP 800-126]), should be considered for assessing the current security status and integrity of an FCKMS. Such monitoring tools could execute on the platform being monitored or on a platform dedicated to monitoring other computers.

FR:8.10 The CKMS design **shall** specify the auditable events supported and indicate whether each event is fixed or selectable.

FR:8.11 For each selectable, auditable event, the CKMS design **shall** specify the role(s) that has the capability to select the event.

FR:8.12 For each auditable event, the CKMS design **shall** specify the data to be recorded[10].

FR:8.13 The CKMS design **shall** specify what automated tools are provided to assess the correct operation and security of the CKMS.

FR:8.14 The CKMS design **shal**l specify system-monitoring requirements for sensitive system files to detect and/or prevent their modification or any modification to their security attributes, such as their access control lists.

PR:8.8.		A Federal CKMS **shall** protect its audit capability and audit logs from unauthorized disclosure and modification.
PR:8.9.		A Federal CKMS **shall** support the detection of attempted, but unauthorized, key and metadata access, modification, and destruction.
PR:8.10.		A Federal CKMS **shall** support the auditing of the following security-relevant events and the data to be recorded about them: a) Key generation: requestor's ID, key ID, key type, and date/time; b) Key owner registration: requestor's ID, owner's ID,

[10] Examples of recorded data include a unique event identifier, the date and time of the event, the subject (e.g., user, role or software process) causing the event, the success or failure of the event, and the event-specific data.

		key ID, authorizer's ID, and date/time; c) Key revocation: requestor's ID, key ID, reason for revocation, and date/time; d) Key destruction: requestor's ID, key ID, reason for destruction, and date/time; e) Unauthorized key and metadata modification: requestor's ID, modification requested, and date/time; f) Key-metadata recovery from backup or archived storage: requestor's ID, key-ID, key-recovery agent's ID and date/time; g) Repetitive attempts of unauthorized key access: requestor's ID, action requested, reason for rejection, and date/time.

PA:8.9.		A Federal CKMS **should** support the monitoring of its internal components, modules, devices, services, functions, and files in order to detect and/or prevent their modification, and then report the results of this monitoring to an FCKMS audit administrator.
PA:8.10.		A Federal CKMS **should** support the ability for the FCKMS auditor and administrator roles to select the security-relevant events to be audited.
PA:8.11.		A Federal CKMS **should** support the use of SCAP to monitor the status and integrity of an FCKMS.
PA:8.12.		A Federal CKMS **should** support the individual accountability of all its users, key owners, and FCKMS management personnel.

8.3 Network Security Control Mechanisms

Network security-control mechanisms should be used to protect computer systems and their network communications against unauthorized access and use. They should be used to detect and prevent network activities that could reduce the security of the transmitted information, especially the cryptographic keys and sensitive metadata.

Networked FCKMS devices should be protected using a combination of firewalls and intrusion detection and prevention systems as boundary-control devices. These devices should be placed in physically secure locations and used to protect FCKMS users, sensitive applications, and vulnerable network services. In order to provide defense-in-depth, boundary-control functions should also be implemented directly in FCKMS devices.

An FCKMS could be designed to be configurable or dynamic, capable of adapting to network threats based on the results of monitoring network performance, communication error detection/correction, and network overload. For example, an attempt to flood a network with repetitive or nonsense data could cause an FCKMS to not accept a data packet or connection request. An intentional and intelligent, but unauthorized, modification of network packets could result in packets being refused or a shutdown of the security-offending components or even the entire network.

FR:8.15 The CKMS design **shall** specify the boundary protection mechanisms employed by the CKMS.

FR:8.16 The CKMS design **shall** specify:

a) The types of firewalls used and the protocols permitted through the firewalls, including the source and destination for each type of protocol; and
b) The types of intrusion detection and prevention systems used, including their logging and security breach reaction capabilities.

FR:8.17 The CKMS design **shall** specify the methods used to protect the CKMS devices against denial of service.

FR:8.18 The CKMS design **shall** specify how each method used protects against the denial of service.

PR:8.11.		A Federal CKMS **shall** support one or more of the network security-control mechanisms from the following list: a) Firewalls, b) Filtering routers, c) Virtual private networks (VPNs), d) Intrusion detection systems (IDS), e) Intrusion prevention systems (IPS), f) Adaptive network security controls, 1) Adaptive filtering mechanisms, 2) Adaptive detection mechanisms, and 3) Adaptive prevention mechanisms.
PR:8.12.		A Federal CKMS **shall** install network security-control mechanisms in physically secure facilities.
PR:8.13.		A Federal CKMS **shall** allow only authorized entities to configure, initiate, activate, and disable network security-control mechanisms.

PA:8.13.		A Federal CKMS **should** support the identification and authentication of each FCKMS module and device.

PA:8.14.		A Federal CKMS **should** support all of the following network security-control mechanisms unless exempted by all of its FCKMS service-using organizations: a) Firewalls that allow only protocols that verify network data sources and destinations, b) Filtering routers, c) Virtual private networks, d) Intrusion detection and prevention systems that include security-event monitoring, the logging, and the reporting of increased levels of security threats and potential compromises, e) Intrusion prevention systems (IPS), f) Adaptive network security controls, 1) Adaptive filtering mechanisms, 2) Adaptive detection mechanisms, and 3) Adaptive prevention mechanisms.

PF:8.5.		A Federal CKMS **could** employ methods that minimize successful denial-of-service attacks and notify the FCKMS management personnel if any such attempted attack is detected.

8.4 Cryptographic Module Controls

A cryptographic module is a set of hardware, software and/or firmware that implements cryptographic-based security functions (e.g. cryptographic algorithms and key establishment schemes). [FIPS 140] specifies requirements on cryptographic modules that are used by the Federal government. This Profile requires the use of FIPS 140-validated cryptographic modules (see Section 2.10).

Two primary security issues should be addressed regarding the security of the contents of cryptographic modules: the integrity of the security functions and the protection of the cryptographic keys and metadata. Since cryptographic keys are present in plaintext form for some period of time within the module, physical security measures are necessary to protect keys from unauthorized disclosure, modification, and substitution. A cryptographic module may provide the necessary physical protection. Otherwise, a larger, physically protected space that includes the module is needed.

Each [FIPS 140] cryptographic module must be used in accordance with the cryptographic module's security policy. This detailed security policy specifies the rules for operating the cryptographic module, including the security rules that were applicable to the module and derived from [FIPS 140], and those imposed by the module developer.

When cryptographic modules have been validated to FIPS 140 security level 1, an FCKMS must provide physical-security protection that compensate for the level 2 physical-security requirements not included in the module (see Section 2.10).

FR:8.19 The CKMS design **shall** identify the cryptographic modules that it uses and their respective security policies, including:

a) The embodiment of each module (software, firmware, hardware, or hybrid),
b) The mechanisms used to protect the integrity of each module,
c) The physical and logical mechanisms used to protect each module's cryptographic keys, and
d) The third-party testing and validation that was performed on each module (including the security functions) and the protective measures employed by each module.

When the physical protection provided by a module itself is not deemed adequate by an FCKMS service-user, then a physically protected facility must be provided for the module.

PR:8.14.		A Federal CKMS **shall** use cryptographic modules in accordance with the security policy of that module.

8.5 Federal CKMS Security-Controls Selection Process

Federal CKMS security controls should be selected, implemented, and used in a manner that protects itself and all FCKMS modules and cryptographic keys and metadata in accordance with [FIPS 199], [FIPS 200], and [SP 800-53].

The process specified in the following requirements is defined and explained in [FIPS 199], [FIPS 200], and [SP 800-53]. The security controls developed in this section will be used in Section 11 to select procedures that will be used to perform a security assessment.

PR:8.15.		An FCKMS service-using organization **shall** specify the types of information to be protected by the FCKMS[11].
PR:8.16.		An FCKMS service-using organization **shall** specify the [FIPS 199] security category for each type of information to be protected by the FCKMS and the overall security category of the FCKMS
PR:8.17.		An FCKMS service-using organization **shall** specify the [FIPS 200] impact level of the FCKMS based on the [FIPS 199] security category of the FCKMS.
PR:8.18.		An FCKMS service-using organization **shall** specify the [SP

[11] See SP 800-60 for guidance on commonly used information types.

		800-53] security-control baseline based on the [FIPS 200] impact level of the FCKMS.
PR:8.19.		The selected security-control baseline for an FCKMS **shall** be tailored in accordance with the tailoring guidance in [SP 800-53].
PR:8.20.		An FCKMS service-using organization **shall** specify that the security controls provided in the FCKMS were assessed for effectiveness and deemed adequate for operational use.
PR:8.21.		An FCKMS service-using organization **shall** specify, for each security control, the assurance requirements that are necessary to meet the impact level to be provided by the FCKMS.
PR:8.22.		An FCKMS **shall** assess the effectiveness of the FCKMS security controls on an ongoing basis in accordance with the continuous-monitoring guidance provided in [SP 800-53], [SP 800-37], and [SP 800-137].
PR:8.23.		An FCKMS service-using organization **shall** specify the events that require the immediate need to assess the security of the information system, to reassess the current security controls, and to take corrective action.
PR:8.24.		A Federal CKMS **shall** comply with [FIPS 199], [FIPS 200], and [SP 800-53], including: a) Specifying the [FIPS 199] security categories (SCs) of user applications and data, including keys and their metadata. b) Specifying the [FIPS 200] impact level of the FCKMS. c) Specifying the [SP 800-53] security controls protecting FCKMS users, applications, keys, and their metadata. d) Supporting the [SP 800-53] security controls, including the baseline security controls derived from the impact level of the FCKMS. e) Supporting security controls that were approved by the FCKMS service-provider's management personnel and deemed adequate for operational use by all its FCKMS service-using organizations. f) For each security control, specifying the assurance requirements that are necessary to achieve the impact level required by the FCKMS. g) Specifying the events that would initiate an assessment of the security of the FCKMS, a reassessment of the current security controls used, and completing all corrective actions required.

9. Testing and System Assurances

Prior the procurement of a CKMS or CKMS services, a CKMS should be subjected to and pass several types of testing to ensure that it 1) conforms to its design and required standards, 2) operates according to its design specifications, 3) rejects service requests that could compromise its security, and 4) is interoperable with peer FCKMSs (if required). Various types and levels of testing should be conducted to obtain assurance that the CKMS, including its modules and devices, performs as desired.

PA:9.1.		A Federal CKMS **should** pass procurement and user acceptance testing performed by the CKMS implementer and any third-party before procurement.
PA:9.2.		A Federal CKMS **should** pass periodic self-testing after installation and during operation.

9.1 CKMS Implementer Testing

A CKMS, including its modules and devices, should undergo tests by its implementer to verify that the CKMS performs as expected. The tests and results are often proprietary to the CKMS implementer and might not be publicly available. However, the results of such testing should be made available to Federal procurement officials (perhaps as vendor-proprietary information[12]) in order to complete an FCKMS service-provider's evaluation processes prior to procurement.

FR: 9.1 A CKMS design **shall** specify the non-proprietary vendor testing that was performed on the system and passed.

PR:9.1.		All CKMS implementer tests that have been performed on a CKMS, its modules, and devices **shall** be reviewed by a Federal procurement authority who then verifies the test results prior to procurement acceptance.

9.2 Third-Party Testing

A CKMS implementer, an FCKMS service-providing organization, or an FCKMS service-using organization could initiate third-party testing of an FCKMS module or device for conformance to selected standards or to obtain specific information about the FCKMS. Third-party testing is intended to provide confidence that the designer and implementer did not overlook some flaw in their own testing procedures or error in the testing results. For example, the National Institute of Standards and Technology has established several programs for validating conformance to its cryptographic standards and recommendations, often by third-parties. These validations produce a higher level of assurance regarding specific characteristics of a product or service.

[12] Proprietary test results must be marked appropriately, packaged separately, and handled securely.

FR:9.2 The CKMS design **shall** specify all third-party testing programs that have been passed to date by the CKMS or its devices.

PR:9.2.		Cryptographic modules to be incorporated into a Federal CKMS **shall** be validated within NIST's Cryptographic Module Validation Program (CMVP).

PA:9.3.		Non-cryptographic software and hardware used within a Federal CKMS **should** be validated using the Common Criteria Standard ([ISO/IEC 15408 Parts 1- 3], National Information Assurance Partnership (NIAP)).
PA:9.4.		All Federal CKMS modules and devices **should** be tested by a third party, and the test results provided to the appropriate FCKMS procurement authorities for review.

9.3 Interoperability Testing

Interoperability testing, in its most general form, tests that two or more devices can be connected and operate with one another. Interoperability of the devices does not necessarily verify the correct functioning of any device. Conformance with standards and/or passing interoperability tests does not assure that two devices are interoperable under all conditions. However, validation programs, such as the NIST Cryptographic Algorithm Validation Program (CAVP) within the CMVP, can be used to verify the interoperability of a commercial implementation of NIST-approved cryptographic algorithms with a NIST implementation of that algorithm (see Section 9.2).

FR:9.3 If a CKMS claims interoperability with another system, then the CKMS design **shall** specify the tests that have been performed and passed that verify the claim.

FR:9.4 If a CKMS claims interoperability with another system, then the CKMS design **shall** specify any configuration settings that are required for interoperability.

PR:9.3.		All NIST-**approved** cryptographic algorithms used by Federal CKMS cryptographic modules **shall** pass all the appropriate NIST CAVP tests.

PF:9.1.		A Federal CKMS **could** test interoperability among all CKMS modules and devices being proposed for inclusion in an FCKMS and their closest approved reference implementations.

9.4 Self-Testing

An FCKMS module or device could be designed, implemented, and operate correctly when first deployed, but then fail some time later. A Federal CKMS must use modules and devices that test themselves for functionality, integrity and security.

FR:9.5 The CKMS design **shall** specify all self-tests created and implemented by the designer and the corresponding CKMS functions whose correct operation they verify.

PR:9.4.		A Federal CKMS **shall** perform initial and periodic self-tests that verify the correct operation of its modules and devices, and verify that they pass all tests for functionality, integrity, and security.

9.5 Scalability Testing

Scalability is a characteristic of a system, network, or process to perform increasing amounts of work correctly. Scalability testing involves testing a device or system to learn how it reacts when the number of transactions to be processed or participants to be serviced properly during a given period of time increases dramatically. Scalability testing can be used to stress devices and systems so that overload problems are detected and mitigated before an FCKMS becomes operational.

FR:9.6 The CKMS design **shall** specify all scalability analysis and testing performed on the system to date.

PR:9.5.		A Federal CKMS **shall** be subjected to scalability tests, and the results of such testing provided to a Federal procurement authority for review prior to the acquisition of an FCKMS.

9.6 Functional and Security Testing

Functional testing is used to verify that an implementation performs correctly. For example, a functional test could verify that an implemented encryption algorithm produces the correct ciphertext,

Security testing is used to verify that an implementation operates securely (e.g., that it does not accidentally or intentionally disclose the key). For example, a security test could verify that, even though a cryptographic algorithm implementation produces the correct results, fluctuations in power consumption or other outside influences that could affect cryptographic processes do not compromise the key.

Penetration testing is a specific type of security testing in which a team of testing experts attacks one or more of a system's computers or components to defeat its security. Prior to penetration testing, the FCKMS is analyzed for potential vulnerabilities that could be exploited by the penetration team. Such vulnerabilities could result from an incomplete

CKMS design, an improper FCKMS configuration, hardware or software flaws, or operational weaknesses in key-management services or technical countermeasures. The scope of penetration testing should include FCKMS hardware, software, personnel procedures, facilities, and environmental services. Any findings of, and conclusions reached, by the penetration testing team should be addressed before initial deployment of the FCKMS.

Note that individual FCKMS product/device penetration testing could be conducted as part of an FCKMS security assessment (see Section 11).

FR:9.7 The CKMS design **shall** specify the functional and security testing that was performed on the system and the results of the tests.

PR:9.6.		A Federal CKMS **shall** pass functional and security testing, including penetration testing, before its initial operation.
PR:9.7.		A Federal CKMS **shall** conduct functional and security testing annually, and continue operation only if the tests are passed.

PF:9.2.		Automated functional and security testing **could** be performed on a Federal CKMS after creating of a new domain security policy from two or more existing domain security policies.

9.7 Environmental Testing

CKMS designers often assume a particular environment (e.g., temperature range and voltage range) in which a proposed CKMS product will operate. The CKMS is then designed, built and tested for use within that environment. If the products are used in a different environment, secure operation could be lost. A CKMS being considered for procurement should be subjected to various environments that would test its capability to withstand induced environmental changes that stress its limits. Note that [FIPS 140] requires environmental testing of cryptographic modules at FIPS-140 security level 4.

FR:9.8 The CKMS design **shall** specify the environmental conditions in which the CKMS is designed to be used.

FR:9.9 The CKMS design **shall** specify the results of environmental testing that was performed on the CKMS devices, including the results of all tests stressing the devices beyond the conditions for which they were designed.

PA:9.5.		All Federal CKMS modules and devices **should** undergo and pass environmental testing before becoming operational.

9.8 Development, Delivery, and Maintenance Assurances

CKMS products must be protected against unauthorized modification during development, delivery, and maintenance. A CKMS product that could be considered for procurement and use in an FCKMS should support configuration management after installation and, in the case of a security compromise, support flaw remediation activities.

9.8.1 Configuration Management

An FCKMS should incorporate products that are developed and maintained under an appropriate configuration management system in order to ensure that security is not reduced and functional flaws are not introduced due to unauthorized or unintentional changes to the products.

Configuration management includes maintaining records of the make, model, and version of all CKMS/FCKMS modules and devices.

FR:9.10 The CKMS design **shall** specify:

a) The devices (including their source code, documentation, build scripts, executable code, firmware, hardware, documentation, and test code) to be kept under configuration control.
b) The protection requirements (e.g., formal authorizations and proper record keeping) to ensure that only authorized changes are made to the components and devices under configuration control.

PR:9.8.		A Federal CKMS **shall** be under configuration management during design, implementation, procurement, installation, configuration, operation, maintenance, and final destruction.

PF:9.3.		A Federal CKMS **could** use automated configuration management control of its FCKMS modules, devices, and operational status throughout its lifetime.

9.8.2 Secure Delivery

When the computers, software, modules, and devices that are to be used in an FCKMS are delivered, assurance of secure delivery (i.e. that the products received are the exact products that were ordered) is required.

FR:9.11 The CKMS design **shall** specify secure delivery requirements for the products used in the CKMS, including:

a) Protection requirements to ensure that the product has not been tampered with during the delivery process or that tampering is detected,
b) Protection requirements to ensure that the product has not been replaced during the delivery process or that replacement is detected,

c) Protection requirements to ensure that an unrequested delivery is detected, and
d) Protection requirements to ensure that the product delivery is not suppressed or delayed and that suppression or delay is detected.

PR:9.9.		A Federal CKMS **shall** verify that: a) The delivered product has not been tampered with during the delivery process, b) The product has not been replaced during the delivery process, c) The delivery of unrequested items is refused, and d) Product delivery is not suppressed or delayed.
PR:9.10.		A Federal CKMS **shall** support the notification of FCKMS management personnel when: a) Any modification or replacement of the expected delivery item is detected, and b) Any delay or cancellation of product delivery is detected.

9.8.3 Development and Maintenance Environmental Security

The CKMS development and FCKMS maintenance environments must be protected against physical, technical, and personnel threats. Tools such as compilers, software loaders, and text editors should not be automatically trusted.

FR:9.12 The CKMS design **shall** specify the security requirements for the development and maintenance environments of the CKMS, including:

a) Physical security requirements,
b) Personnel security requirements, such as clearances and background checks for developers, testers, and maintainers,
c) Procedural security, such as multi-person control and separation of duties,
d) Computer security controls to protect the development and maintenance environment and to provide access control to permit authorized user access,
e) Network security controls to protect the development and maintenance environment from hacking attempts,
f) Cryptographic security control to protect the integrity of software and its control data under development, and
g) The means used to ensure that the tools (e.g., editors, compiler, software linkers, loaders, etc.) are trustworthy and are not sources of malware.

PR:9.11.		A Federal CKMS service-using organization **shall** verify that the CKMS designer and developer followed the claimed procedures for the development and maintenance environment documented for **FR: 9.12**.

PR:9.12.		A Federal CKMS **shall** protect against physical, technical, and personnel threats during FCKMS maintenance activities.

9.8.4 Flaw Remediation Capabilities

The detection, reporting, and correction of FCKMS flaws must be done in an expeditious and secure manner. Users should report potential and detected flaws to the FCKMS management. An FCKMS that employs automated flaw-detection techniques is highly desirable because it can continuously monitor its own security status, report potential problems to an authorized person fulfilling an appropriate FCKMS role, and minimize reliance on human monitoring of events that occur infrequently.

FR:9.13 The CKMS design **shall** specify the CKMS capabilities for detecting system flaws, including:

a) Known-answer tests,
b) Error detection codes,
c) Anomaly diagnostics, and
d) Functional Testing.

FR:9.14 The CKMS design **shall** specify the CKMS capability for reporting flaws, including: the capability to produce status report messages with confidentiality, integrity and source authentication protections, and to detect unauthorized delays.

FR:9.15 The CKMS design **shall** specify the CKMS capability for analyzing flaws and creating/obtaining fixes for likely or commonly known flaws.

FR:9.16 The CKMS design **shall** specify its capability to transmit fixes with confidentiality, integrity and source authentication protections and to detect unauthorized delays.

FR:9.17 The CKMS design **shall** specify its capability for implementing fixes in a timely manner.

PR:9.13.		A Federal CKMS **shall** support the detection, reporting, and timely correction of security-compromising flaws by supporting one or more methods for: a) Users to report flaws to the FCKMS management, b) Confidentiality and integrity protection of the flaw report, c) Submitting the flaw report to the CKMS designer, and d) Processing the flaw report, including determining the appropriate action to be taken after a flaw is detected.

PF:9.4.		A Federal CKMS **could** support automated flaw-detection and reporting of potential security problems to FCKMS management personnel.

9.8.5 Ease-of-Use Testing

An FCKMS should be easy to use, manage, and maintain. In order to evaluate ease-of-use, a panel of people having different expertise and experience typically creates evaluation criteria, and selects and monitors user-device-interface ease-of-use evaluation tests that are performed by a test group of users.

An FCKMS could support a demonstration of correct FCKMS usage, and could be designed to adapt to a user's experience and abilities. An FCKMS should automatically detect incorrect user input; this requires an expectation of the length, format or range of the expected input.

PA:9.6.		A Federal CKMS **should** support user interfaces that have been evaluated and approved for ease-of-use prior to acceptance by a panel of users with varying experience in key-management.
PA:9.7.		A Federal CKMS **should** be designed to detect incorrect user input, when possible.

PF:9.5.		A Federal CKMS **could** support automated demonstrations of its capabilities and ease of operation.
PF:9.6.		A Federal CKMS **could** adapt to a user's experience and abilities.
PF:9.7.		A Federal CKMS **could** be evaluated for ease-of-use by a third-party prior to procurement and when any human-to-FCKMS interface changes are made.

10. Disaster Recovery

An FCKMS failure could hamper or prevent access to an organization's information. For example, the inability to decipher information because the key is destroyed will prevent the use of enciphered data because the information cannot be decrypted. This section describes how operational continuity can be achieved in the event of component failures or the corruption of keys and metadata.

Disaster recovery requires having procedures and sufficient redundancy to recover from facility damage, utility service outages, communication and computation outages, hardware and software failures, and other failures that result in the corruption of keys and metadata.

PR:10.1.		A Federal CKMS **shall** be installed and operated with sufficient redundancy to ensure operational continuity.

PA:10.1.		A Federal CKMS **should** have procedures and sufficient redundancy to recover to a secure state within 24 hours following a detected failure.

PF:10.1.		A Federal CKMS **could** have procedures and sufficient redundancy to recover to a secure state within one hour following a detected failure.

10.1 Facility Damage

FCKMS components should be located in physically secure and environmentally protected facilities. Facilities may be either fixed or mobile.

For an FCKMS module in a fixed facility, wind, water and fire damage are common risks. For mobile facilities, risks also include physical damage, accidental loss, theft, destruction, and a higher probability of use by unauthorized entities than is the case for a fixed facility. For mobile devices that contain FCKMS capabilities, the enclosure is considered to be the facility (see Section 8.1) and should have physical protection against unauthorized access to the device's electronics. Mobile devices could be provided with waterproof containers and owner-identity verification (e.g., fingerprint scanner and verifier). The owner who carries and uses a secure mobile device is responsible for protecting it against physical damage, loss, and unauthorized use.

Whether an FCKMS is operated in a fixed or mobile facility, a backup facility or capability should be provided, and the FCKMS should support reporting and recovery procedures in the event of damage to a primary FCKMS facility. FCKMS facilities should be designed, implemented, and operated in a manner commensurate with the value and sensitivity of the information being protected.

In the case of a fixed facility, a backup facility should be brought on-line; for a mobile facility, the mobile device may need to be replaced, and keying material loaded from backup. In either case, secret and private keys and keys associated with sensitive metadata that could have been disclosed should be immediately placed on Compromised Key Lists or Certificate Revocation Lists and replaced.

A mobile FCKMS device should have the capability of being deactivated remotely by the FCKMS management, and the sensitive keys and metadata within the device should be destroyed.

FR: 10.1 The CKMS design **shall** specify the required environmental, fire, and physical access control protection mechanisms and procedures for recovery from damage to the primary and all backup facilities**.**

PR:10.1.		The components of a Federal CKMS **shall** be located in physically secure and environmentally protected facilities.
PR:10.2.		A Federal CKMS **shall** have redundancy to ensure operational continuity when high-availability is required.
PR:10.3.		A Federal CKMS **shall** support recovery procedures in the event of the damage or loss of an FCKMS capability.
PR:10.4.		A Federal CKMS **shall** be operated in facilities that provide levels of protection and availability that are commensurate with the impact level of the information being protected.
PR:10.5.		When a primary facility is damaged and a backup facility is available, a Federal CKMS **shall** activate its backup facility and place keys that have, or could have, been compromised on Compromised Key or Certificate Revocation Lists and replace those keys, if required.
PR:10.6.		A Federal CKMS **shall** be tested annually to determine that facility-damage detection and recovery mechanisms and procedures work as required.
PR:10.7.		The procedures for maintaining and testing the environmental, physical, and disaster recovery capabilities of a Federal CKMS **shall** be evaluated every five years and upgraded as needed.
PR:10.8.		Damaged or lost FCKMS devices **shall** be reported to FCKMS management personnel.

PA:10.2.		The mobile devices of a Federal CKMS **should** have physical protection against unauthorized access to the device's electronics.
PA:10.3.		A Federal CKMS **should** have the capability of remotely deactivating mobile FCKMS devices and destroying sensitive keys and metadata within those devices.
PA:10.4.		A Federal CKMS component in a fixed facility **should** be tested every six months to verify that adequate environmental, fire, and physical protection is available.
PA:10.5.		The fixed facilities of a Federal CKMS **should** have backup

		facilities and capabilities so that the FCKMS can resume normal operations within twelve hours of a failure of the primary facility.
PA:10.6.		A Federal CKMS **should** report destroyed or missing keys and metadata in primary and backup facilities to the FCKMS cryptographic officer.

PF:10.2.		A Federal CKMS mobile facility **could** have one or more backup facilities.
PF:10.3.		A Federal CKMS **could** have one or more archive facilities for long-term storage of keys and metadata.

10.2 Utility Service Outage

An FCKMS module in a fixed facility requires reliable utility services (e.g., electrical power) for assuring its availability. Other required services could include water, sewer, air conditioning, heat, and clean air. Adequate utility services in all primary and backup fixed facilities must be available to support all electronic devices, human safety and comfort during normal operations and emergencies, and should be provided to all primary and backup facilities.

Mobile devices with FCKMS capabilities require backup batteries and battery chargers.

Backup systems should have utility services that are independent from those of the primary system. For example, a surge from a power-line lightning strike could cause both the primary system and its backup to fail if they are both served by the same power line.

FR: 10.2 The CKMS design **shall** specify the minimum, as well as recommended electrical, water, sanitary, heating, cooling, and air filtering requirements for the primary and all backup facilities.

PR:10.9.		A Federal CKMS **shall** be provided with sufficient utility services to support all primary and backup fixed facilities during both normal operation and emergencies.
PR:10.10.		A Federal CKMS **shall** conform to applicable Federal and industry standards for utility assurance and satisfy the CKMS design requirements for utility services for all primary, backup, and archive facilities.

10.3 Communication and Computation Outage

An FCKMS needs sufficient communication and computation capability to perform its required functions and to provide the key-management services that are required by its users. Redundant communication and computation capability should be provided to an FCKMS when high availability is required. The ability to access alternative communication services is highly desirable in the event of a communication-service failure.

FR:10.3 The CKMS design **shall** specify the communications and computation redundancy present in the design and required to be available during operation in order to assure continued operation of services commensurate with the anticipated needs of users, enterprises, and CKMS applications.

PR:10.11.		When high reliability and availability of the FCKMS services is required, a Federal CKMS **shall** have alternative communications, computation, and electrical services available that can be activated as needed.

PA:10.7.		A Federal CKMS **should** have the computation and communication redundancy needed to recover within twelve hours from computation or communication failures.
PA:10.8.		The utility service for a backup system of a Federal CKMS **should** be independent from that of the primary system.

PF:10.4.		A Federal CKMS **could** support automatic switching to backup computation and communication services within fifteen minutes of a detected utility-service outage.

10.4 FCKMS Hardware Failure

Since an FCKMS is critical for the secure operation of the information-management system that it supports, it is desirable to minimize the impact of hardware failures of FCKMS components and devices. Replacement parts should be available for critical components, or complete system redundancy should be available to obtain assurance that the operational impact of a hardware failure is minimal, i.e., limited to reduced performance and response time. For backup systems to be most effective, they should maintain real-time synchronization with the primary system; such a system is called a "hot" backup, and these systems are capable of immediately taking over the responsibilities of the primary system. Some systems (called "cold" backups) synchronize periodically and have a catch-up procedure to bring the backup system up to the state that the primary system had just before the failure occurred.

It is essential that backup systems have as much independence from the primary system as possible so that a failure to the primary system does not also result in the same failure to the backup. Multiple backup systems could be used to provide error-detection capabilities.

Redundant FCKMS devices can be used to provide error-detection and correction capabilities. Two FCKMS devices performing the same services can detect discrepancies in the results of a key-management function; three systems, all performing the same function, can detect a failure in one system and correct a single failure using the results of the other two devices, assuming that the results are the same. Since redundancy multiplies the cost of providing key management services, FCKMS service-providing organizations should attempt to find an optimum trade-off between redundancy and cost.

FR:10.4 The CKMS design **shall** specify the strategy for backup and recovery from failures of hardware components and devices.

PR:10.12.		A Federal CKMS **shall** perform initial and periodic tests of backup and recovery capabilities of its critical FCKMS modules and devices.
PR:10.13.		A Federal CKMS **shall** test backup and recovery of services requiring high availability at least annually.

PA:10.9.		A Federal CKMS **should** perform tests of security-critical hardware at least monthly.
PA:10.10.		A Federal CKMS **should** repair or replace failed critical hardware and be returned to operational status within 24 hours of a failure.

PF:10.5.		A Federal CKMS **could** repair or replace failed hardware and be returned to operational status within one hour of a failure when high availability is required.
PF:10.6.		A Federal CKMS **could** automatically verify the operational readiness of its hot backup services weekly and its cold backup services monthly.

10.5 System Software Failure

Software errors can have security results ranging from minor problems to catastrophic failures. Corrupted software should be detected and replaced as soon as possible. An error-detection code can be computed on the correct software, or a known-answer test can be performed on the correct software and then periodically and used to verify that the code or test result is still correct. If an error is detected, an error state should be entered, and an error report should be sent to the FCKMS management.

When a primary FCKMS facility is restored from backup, the most recent information since the last secure state was backed up could be lost. Full secure-state FCKMS backups should be performed on a regular basis, and the latest FCKMS secure state should be reloaded into a repaired-and-ready FCKMS component or device upon detection of a software failure.

FR:10.5 The CKMS design **shall** specify all techniques provided by the CKMS to verify the correctness of the system software.

FR:10.6 The CKMS design **shall** specify all techniques provided by the CKMS to detect alterations or garbles to the software once it is loaded into memory.

FR:10.7 The CKMS design **shall** specify the strategy for backup and recovery from a major software failure.

PR:10.14.		A Federal CKMS **shall** use software that has passed correctness and integrity tests.
PR:10.15.		A Federal CKMS **shall** perform backups of its software after the current secure-state of the FCKMS software is verified.
PR:10.16.		A Federal CKMS **shall** reload its software from the latest FCKMS secure-state backup after a software failure is detected or suspected.
PR:10.17.		A Federal CKMS **shall** verify that it is in a secure-state following the initial loading of its software and before becoming operational.
PR:10.18.		A Federal CKMS **shall** ensure that all software errors are analyzed and repaired before it is returned to a secure state.

PA:10.11.		A Federal CKMS **should** perform software and critical-data backups daily.
PA:10.12.		A Federal CKMS **should** perform full secure-state backups at least weekly.

PF:10.7.		A Federal CKMS c**ould** automatically verify correct operation of the FCKMS software by randomly performing supported key-management functions simultaneously in the primary and hot-backup facilities and verifying that the results are identical.

10.6 Cryptographic Module Failure

Cryptographic modules should have built-in tests that are adequate to detect hardware, software, or firmware failures. [FIPS-140]-validated modules perform pre-operational, conditional, and periodic self-tests. If a failure is detected, the module enters an error state that outputs an error indicator and determines if the error is a non-recoverable type (i.e. one that requires service, repair, or replacement) or a recoverable type (i.e., one that requires initialization or resetting). If the error is recoverable, the module should be rebooted and pass all power-up self-tests before performing normal processing. If the error recurs after repeated attempts to reboot, then the module should be replaced

FR:10.8 The CKMS design **shall** specify what self-tests are used by each cryptographic module to detect errors and verify the integrity of the module.

FR:10.9 The CKMS design **shall** specify how each cryptographic module responds to detected errors.

FR:10.10 The CKMS design **shall** specify its strategy for the repair or replacement of failed cryptographic modules.

PA:10.13.		If an error detected by a cryptographic module of a Federal CKMS is recoverable, the module **should** be rebooted and pass all power-up tests before operational use.

PF:10.8.		A Federal CKMS **could** automatically switch FCKMS processing to a backup cryptographic module upon detection or suspicion of a cryptographic module failure.

10.7 Corruption of Keys and Metadata

Cryptographic keys and metadata can be corrupted during transmission or in storage. If a corrupted key, or a key with corrupted metadata, has been used to protect data, the security consequences should be evaluated, since a loss or compromise of sensitive data could result. Corrupted keys and metadata should be either replaced or recovered from reliable storage (e.g., backup) as soon as the corruption is detected. If a corrupted key and/or metadata was used to protect information, then the corrupted key should be revoked.

FR:10.11 The CKMS design **shall** specify its procedures for backing-up and archiving cryptographic keys and their metadata.

FR:10.125 The CKMS design **shall** specify its procedures for restoring or replacing corrupted keys and metadata that have been stored or transmitted**.**

PR:10.19.		A Federal CKMS **shall** support: a) Detecting corrupted keys and metadata, b) Reporting corrupted keys or metadata to the FCKMS management and affected entities, c) Preventing the use of corrupted keys and/or metadata for applying cryptographic protection, and d) Recovering or replacing corrupted keys and metadata.
PR:10.20.		A Federal CKMS **shall** train CKMS personnel to perform key recovery and replacement.

PA:10.14.		A Federal CKMS **should** recover or replace corrupted keys and metadata as soon as the corruption is detected or suspected.
PA:10.15.		A Federal CKMS **should** evaluate the potential consequences of having used a corrupted key or metadata.
PA:10.16.		A Federal CKMS **should** revoke corrupted keys.

PF:10.9.		A Federal CKMS **could** automatically report corrupted keys and metadata to all potentially affected entities, and initiate recovery and replacement procedures.

11. Security Assessment

Security should be assessed periodically throughout the entire lifetime of a Federal CKMS. An assessment should be performed prior to making an FCKMS operational that includes its design, implementation, procurement, installation, and proposed management. This section describes assessments that should be made prior to its initial operation, during periodic (e.g., annual) reviews, and after major changes. For additional information on security assessment practices, see [SP 800-37], [SP 800-53], [SP 800-53A], and [SP 800-115].

A security assessment should be performed by a team of experienced people with expertise in several areas that are selected based on the type of assessment being conducted. A security-assessment team should consist of individuals who possess expertise in these areas and in the planned security assessment topic.

PA:11.1.		A Federal CKMS **should** be subjected to security assessments by a team of people that collectively have experience and expertise in: a) Computer Security, b) Cryptography,

		c) Cryptographic protocols, d) Distributed system design, e) Functional safety, f) Human usability/accessibility requirements, g) Key Management, h) Network Security, i) Information Security, j) Secure information system laws, regulations and standards, k) Secure system design, and l) Security Assessments.

PF:11.1.		A Federal CKMS **could** initiate a security assessment in accordance with a new domain security policy that has been created after being warned of potential security problems by another FCKMS.

11.1 Full Security Assessment

Following installation, but prior to its initial operation, the security of an FCKMS should be assessed.

FR:11.1 The CKMS design **shall** specify the necessary assurance activities to be undertaken prior to or in conjunction with a full CKMS security assessment.

FR:11.2 The CKMS design **shall** specify the circumstances under which a full security assessment is to be repeated.

PR:11.1.		A Federal CKMS **shall** undergo a security assessment before becoming operational and include the following: a) A review of the results of security testing by the CKMS developer, b) An architectural review of the CKMS design and the FCKMS planned architecture, c) A review of the results of security tests conducted by third-party testing organizations, d) Functional and security testing of the FCKMS, including conducting penetration tests
PR:11.2.		A Federal CKMS **shall** undergo and pass a security assessment under the following circumstances: a) Before initial operation, b) After major system changes, and c) Immediately after the occurrence or suspected occurrence of a compromise.

PR:11.3.		A Federal CKMS **shall** be assessed to ensure that it supports the FCKMS security policies of its service-using organizations.

PA:11.2.		A Federal CKMS **should** support all interfaces that are needed for testing by a security-assessment team.
PA:11.3.		A Federal CKMS **should** support performing security assurance tests during normal operation, periodically, and under emergency conditions.

11.1.1 Review of Third-Party Testing and Verification of Test Results

Even though no formal validation programs for the security of an entire FCKMS currently exist, certain programs have been established to test parts of the FCKMS, including:

a) NIST's Cryptographic Algorithm Validation Program (CAVP), which tests NIST-approved cryptographic algorithms in cryptographic modules against their specifications,
b) NIST's Cryptographic Module Validation Program (CMVP), which tests cryptographic modules against the requirements in [FIPS 140], and
c) The National Information Assurance Partnership (NIAP), which tests non-cryptographic software and hardware against the Common Criteria Standard (see [ISO/IEC 15408 Parts 1- 3]).

Even though these programs do not guarantee security, they can significantly increase confidence in the security and integrity of an FCKMS.

FR:11.3 The CKMS design **shall** specify all validation programs under which any of the CKMS devices have been validated.

FR:11.4 The CKMS design **shall** specify all validation certificate numbers for its validated devices.

PR:11.4.		During a security assessment, the assessment team for a Federal CKMS **shall** verify that NIST-approved cryptographic algorithms are supported in the FCKMS and have been validated under the NIST Cryptographic Algorithm Validation Program (CAVP).
PR:11.5.		During a security assessment, the assessment team for a Federal CKMS **shall** verify that all cryptographic modules used by the FCKMS have been validated for conformance to FIPS 140 under the NIST Cryptographic Module Validation

		Program (CMVP).

PA:11.4.		During a security assessment, the assessment team for a Federal CKMS **should** verify that non-cryptographic software and hardware (e.g. operating systems, DBMS, or firewalls) used in or by the FCKMS have been validated using the Common Criteria Standard (see [ISO/IEC 15408 Parts 1- 3]) under the National Information Assurance Partnership (NIAP)
PA:11.5.		During a security assessment, the assessment team for a Federal CKMS service-using organization **should** verify that the entire FCKMS or parts thereof have been tested by a third-party entity and that the results have been verified as being correct.

11.1.2 Architectural Review of System Design

A team of experts should be assembled to review the architecture of an FCKMS.

FR:11.5 The CKMS design **shall** specify whether an architectural review is required as part of the full security assessment.

FR:11.6 If an architectural review is required, then the CKMS design **shall** specify the skill set required by the architectural review team.

PR:11.6.		An architectural review **shall** be conducted on a Federal CKMS prior to becoming operational.
PR:11.7.		During an architectural review, the assessment team for a Federal CKMS **shall** have access to all CKMS design information, third-party-validation information, and all the results of available FCKMS/CKMS testing.

PA:11.6.		The architectural review team for a Federal CKMS **should** recommend penetration-testing scenarios.
PA:11.7.		A Federal CKMS using-organization **should** analyze the results of the architectural review before procuring an FCKMS.

11.1.3 Functional and Security Testing

Functional and security testing of an FCKMS should be performed prior to initial deployment, during subsequent periodic security reviews, and during incremental security assessments. Functional and security tests should be performed by the CKMS

developer, the FCKMS service provider, or a trusted third party. These tests could also be performed, or the results reviewed, by an FCKMS-using organization.

Functional testing should include usability tests for users whose knowledge and experience with an FCKMS range from novice to expert. An FCKMS is considered to be "user-friendly" when it can be easily used by novice users, or when the services are automatically provided and controlled by an FCKMS that is "transparent" to the user.

FR:11.7 The CKMS design **shall** specify all required functional and security testing of the CKMS.

FR:11.8 The CKMS design **shall** report the results of all functional and security tests performed to date.

PR:11.8.		A Federal CKMS **shall** undergo functional and security testing, including usability tests, by the CKMS developer, FCKMS service provider and/or a third party before initial operation.

PF:11.2.		A Federal CKMS **could** automatically test the security and functionality of all of its services that are intended to support and interact with other security domains and report the results to all participating security domain administrators.

11.1.4 Penetration Testing

Penetration testing is intended to subject an FCKMS to various potential active attacks that could potentially compromise its security. This type of testing requires security experts who are knowledgeable about typical system weaknesses and attacks against them, and who can create new or unsuspected attack methods. The penetration-testing team should include some individuals who are not part of the CKMS design team and who do not have preconceived notions about its security.

FR:11.9 The CKMS design **shall** specify the results of any completed penetration testing performed to date.

PR:11.9.		Before becoming operational, a Federal CKMS **shall** be subjected to penetration testing by a team that includes individuals who did not assist in the CKMS design.

PA:11.8.		The penetration-testing team **should** include individuals with experience in computer and communication systems design and testing, software testing, vulnerability analysis, and security threat analysis.

PA:11.9.		A Federal CKMS **should** undergo penetration testing at least every two years.

11.2 Periodic Security Review

FCKMS system controls, physical controls, procedural controls and personnel controls should be reviewed periodically to ensure that these controls are in place and operational. Any changes to the FCKMS since the previous security review should be examined to ensure that the products/components are operating with the latest updates and security patches, and that the products have maintained their third-party security rating. Issues identified from the review should be addressed. In addition, periodic functional and security testing should be performed (see Section 9.6).

FR:11.10 The CKMS design **shall** specify the periodicity of security reviews.

FR:11.11 The CKMS design **shall** specify the scope of the security review in terms of the CKMS devices.

FR:11.12 The CKMS design **shall** specify the scope of the periodic security review in terms of the activities undertaken for each CKMS device under review.

FR:11.13 The CKMS design **shall** specify the functional and security testing to be performed as part of the periodic security review**.**

PA:11.10.		The security of a Federal CKMS **should** be reviewed annually to assure that it is operating with the latest security updates incorporating all current CKMS implementer-supported software.

PF:11.3.		A Federal CKMS **could** perform periodic monitoring of its security-critical key management processing and data storage capabilities, modules, and devices.

11.3 Incremental Security Assessment

Incremental security assessments should be conducted periodically, after any change is made that could adversely affect the operation or security of an FCKMS, after the detection of a loss or compromise of any security-critical information, or a detected, unauthorized modification of one or more security-critical components. Security critical components are any part of an FCKMS whose security would be adversely affected by an unauthorized modification. Security-critical information includes a cryptographic key, sensitive metadata, or FCKMS-controlling information.

If any system change is significant, a complete FCKMS security assessment as specified in Section 11.1 should be conducted.

FR:11.14 The CKMS design **shall** specify the circumstances under which an incremental security assessment should be conducted.

FR:11.15 The CKMS design **shall** specify the scope of incremental security assessments.

PR:11.10.		A Federal CKMS **shall** undergo an incremental security assessment after any change (authorized or unauthorized) is made to any security-critical part of the FCKMS.
PR:11.11.		An incremental security assessment for a Federal CKMS **shall** include the identification of any changes to the system since the last security assessment, an architectural review of any design changes, and functional and security testing of the FCKMS.
PR:11.12.		A Federal CKMS **shall** support producing a report following an incremental security assessment that includes the following: a) The reasons for any changes, b) Inconsistencies that could have arisen between the CKMS design, the FCKMS implementation, and this Profile, c) The results of the assessment, including all discovered security defects, and d) Any corrective actions to be performed and the dates by which the actions must be completed.

PF:11.4.		A Federal CKMS **could** automatically initiate an incremental security assessment after making a change in an existing security policy or when creating a new Domain Security Policy that has been negotiated with one or more FCKMSs in other security domains.

11.4 Security Maintenance

While an FCKMS could be designed, implemented, and operated to provide a specific impact level (e.g., Low, Moderate, or High), the protection provided could be reduced if configuration changes are made or when new threats are identified. In order to maintain or enhance the security of an FCKMS, it should be upgraded in accordance with hardening guidelines.

Hardening is the process of securing a system by reducing its vulnerability to attacks. An FCKMS should have a guideline for hardening the system.

FR:11.16 The CKMS design **shall** list the hardening activities required to be performed in order to maintain its security.

PR:11.13.		Hardening guidelines **shall** be created for a Federal CKMS that include: a) Disabling unnecessary services, b) Installing the latest system patches, c) Configuring file system, directory and register settings, d) Configuring the security-relevant information to be logged, e) Ensuring the required amount of physical security, f) Removing unnecessary usernames and passwords, g) Choosing strong passwords, especially for administration accounts, h) Installing malware-detection software, and i) Verifying that the security settings are still acceptable.
PR:11.14.		A Federal CKMS **shall** verify that: a) The latest security updates and security patches have been installed as soon as they are available, b) Periodic testing against the hardening guidelines has been performed, especially after any changes have been made to the FCKMS and before the FCKMS returns to an operational status.

PA:11.11.		A Federal CKMS **should** support the preparation of a security-assessment report that describes: a) The security maintenance that has been performed on the FCKMS since the last report, b) The current risks of the failure of one or more FCKMS components and/or devices, c) The results of the most recent security assessment, and d) The processes followed in implementing all recommendations for upgrading software or devices that were identified as being subject to failure.
PA:11.12.		A Federal CKMS **should** initiate a security maintenance procedure following notification of an actual or possible security-threatening event.

12. Technological Challenges

A CKMS should be designed and implemented to have a security lifetime of many years. The CKMS designer, FCKMS service-provider and the FCKMS service-using

organization should periodically evaluate possible threats resulting from advances in technology that may render its key-management services insecure, including[13]:

a) New attacks on cryptographic algorithms,
b) New attacks on key-establishment protocols,
c) New attacks on FCKMS devices, and
d) New computing technologies.

FR:12.1 The CKMS design **shall** specify the expected security lifetime of each cryptographic algorithm implemented in the system.

FR:12.2 The CKMS design **shall** specify which sub-functions (e.g., the hash sub-function of HMAC) of the cryptographic algorithms can be upgraded or replaced with similar, but cryptographically improved, sub-functions without negatively affecting the CKMS operation.

FR:12.3 The CKMS design **shall** specify which key establishment protocols are implemented by the system.

FR:12.4 The CKMS design **shall** specify the expected security lifetime of each key establishment protocol implemented in the system in terms of the expected security lifetimes of the cryptographic algorithms employed.

FR:12.5 The CKMS design **shall** specify the extent to which external access to CKMS devices is permitted.

FR:12.6 The CKMS design **shall** specify how all allowed external accesses to CKMS devices are controlled.

FR:12.7 The CKMS design **shall** specify the features employed to resist or mitigate the consequences of the development of new technologies, such as a quantum computing attack on the CKMS cryptographic algorithms.

FR:12.8 The CKMS design **shall** specify the currently known consequences of a quantum computing attack upon the CKMS cryptography.

PA:12.1.		Throughout the lifetime of a Federal CKMS, CKMS designer/developer, and the FCKMS service-providing and service-using organizations **should** evaluate possible threats to the FCKMS resulting from advances in technology that may render the FCKMS insecure, including: a) New attacks on cryptographic algorithms,

[13] See section 12 of the Framework for detailed descriptions of these threats.

		b) New attacks on key-establishment protocols, c) New attacks on FCKMS devices, d) New attacks on access control mechanisms, e) New computing technologies that could reduce the security provided by a cryptographic algorithm, f) New attacks on access control mechanisms, and g) New mathematical attacks that could reduce the protection provided by a cryptographic algorithm and a fixed key length.

PF:12.1.		Federal CKMS administrators **could** review the current FCKMS technology used in security-domain policy specification, negotiation, and/or enforcement to determine if an upgrade or replacement of the FCKMS is needed.

12.1 Intellectual Property Rights

Intellectual property rights, such as copyrights, trademarks, and patents, could restrict access to ideas and technology, and constrain the design and interoperability capabilities of a CKMS. The use of standards could minimize these constraints.

PA:12.2.		Federal CKMS administrators **should** identify intellectual-property rights that are used in the design, implementation, and operation of the FCKMS, and identify additional rights that should be procured when upgrading the system.

Appendix A: References

This document references the following publications. All FIPS and NIST Special Publications are available at http://csrc.nist.gov/publications/index.html.

[FIPS 140] Federal Information Processing Standard 140-2, Security Requirements for Cryptographic modules, May 2001.

[FIPS 180] Federal Information Processing Standard 180-4, Secure Hash Standard, May 2012.

[FIPS 186] Federal Information Processing Standard 186-4, Digital Signature Standard (DSS), July 2013.

[FIPS 197] Federal Information Processing Standard 197, Advanced Encryption Standard (AES), November 2001.

[FIPS 198] Federal Information Processing Standard 198-1, The Keyed-Hash Message Authentication Code (HMAC), July 2008.

FIPS 199] Federal Information Processing Standard 199, Standards for Security Categorization of Federal Information Processing Systems, February 2004.

[FIPS 200] Federal Information Processing Standard 200, Minimum Security Requirements for Federal Information Processing Systems, March 2006.

[SP 800-37] NIST Special Publication 800-37, Rev.1, Guide for Applying the Risk Management Framework to Federal Information Systems: A Security Life Cycle Approach, February 2010.

[SP 800-38A] NIST Special Publication 800-800-38A, Recommendation for Block Cipher Modes of Operation - Methods and Techniques, December 2001.

[SP 800-38B] NIST Special Publication 800-38B, Recommendation for Block Cipher Modes of Operation: The CMAC Mode for Authentication, May 2005.

[SP 800-38D] NIST Special Publication 800-38D, Recommendation for Block Cipher Modes of Operation: Galois/Counter Mode (GCM) and GMAC, November 2007.

[SP 800-53] NIST Special Publication 800-53 Rev. 3, Recommended Security Controls for Federal Information Systems and Organizations, August 2009.

[SP 800-53A] NIST Special Publication 800-53A Rev. 1, Guide for Assessing the Security Controls in Federal Information Systems and Organizations, Building Effective Security, June 2010.

[SP 800-56A] NIST Special Publication 800-56A Rev. 2, Recommendation for Pair-Wise Key-Establishment Schemes Using Discrete Logarithm Cryptography, May 2013.

[SP 800-56B] NIST Special Publication 800-56B, Recommendation for Pair-Wise Key Establishment Schemes Using Integer Factorization Cryptography, August 2009.

[SP 800-57-Part 1] NIST Special Publication 800-57, Part 1, Recommendation for Key Management: Part 1: General (Revision 3), July 2012.

[SP 800-57-Part 3] NIST Special Publication 800-57, Part 3, Recommendation for Key Management, Part 3 Application-Specific Key Management Guidance, December 2009.

[SP 800-89] NIST Special Publication 800-89, Recommendation for Obtaining Assurances for Digital Signature Applications, November 2006.

[SP 800-90A] NIST Special Publication 800-90A, Recommendation for Random Number Generation Using Deterministic Random Bit Generators, January 2012.

[SP 800-108] NIST Special Publication 800-108, Recommendation for Key Derivation Using Pseudorandom Functions, October 2009.

[SP 800-115] NIST Special Publication 800-115, Technical Guide to Information Security Testing and Assessment, September 2008.

[SP 800-126] NIST Special Publication 800-126, The Technical Specification for the Security Content Automation Protocol (SCAP): SCAP Version 1.0, November 2009.

[SP 800-130] NIST Special Publication 800-130, A Framework for Designing Cryptographic Key Management Systems, August 2013.

[SP 800-131A] NIST Special Publication 800-131A, Transitions: Recommendation for Transitioning the Use of Cryptographic Algorithms and Key Lengths, January 2011.

[SP 800-133] NIST Special Publication 800-133, Recommendation for Cryptographic Key Generation, December 2012.

[RFC 5914] Request for Comment 5914, Trust Anchor Format, June 2010.

[RFC 6024] Request for Comment 6024, Trust Anchor Management Requirements, October 2010.

Appendix B: Glossary

This glossary defines terms that are used in this Profile, some of which may also be defined in the Framework.

Access control system	A set of procedures and/or processes, normally automated, that allows access to a controlled area or to information to be controlled in accordance with pre-established policies and rules.
Active state	A lifecycle state for a key in which the key may be used to cryptographically protect information (e.g., encrypt plaintext or generate a digital signature), to cryptographically process previously protected information (e.g., decrypt ciphertext or verify a digital signature) or both.
Archive	Noun: See Archive facility. Verb: To place a cryptographic key and/or metadata into long-term storage that will be maintained even if the storage technology changes.
Archive facility	A facility used for long-term key and/or metadata storage.
Audit log	A record of specified events that is used to provide documentary evidence of those events.
Audit Administrator	An FCKMS role that is responsible for establishing and reviewing an audit log, assuring that the log is reviewed periodically and after any security-compromise-relevant event, and providing audit reports to FCKMS managers.
Auditor	See Audit administrator.
Authorization	The process of verifying that a requested action or service is approved for a specific entity.
Availability	Timely, reliable access to information or a service.
Backup facility	A redundant system or service that is kept available for use in case of a failure of a primary facility.
Backup (key and/or metadata)	To copy a key and/or metadata to a medium that is separate from that used for operational storage from which the key and/or metadata can be recovered if the original values in operational storage are lost or modified.
Backup (system)	The process of copying information or processing status to a

	redundant system, service, component or medium that can provide the needed processing capability when needed.
Certification path	A chain of trusted public-key certificates that begins with a certificate whose signature can be verified by a relying party using a trust anchor, and ends with the certificate of the entity whose trust needs to be established.
Ciphertext	Data in its encrypted form.
CKMS	A Cryptographic Key Management System that is designed and implemented in accordance with [SP 800-130].
CKMS design	The capabilities that were selected and specified by a CKMS designer to be implemented and supported in a CKMS product.
CKMS designer	The entity that selects the capabilities to be included in a CKMS, documents the design in accordance with the requirements specified in [SP 800-130], and specifies a CKMS Security Policy that defines the rules that are to be enforced in the CKMS.
CKMS implementer	The entity that implements a CKMS as designed by the CKMS designer; often called a developer.
CKMS module	A logical and/or physical process that provides all CKMS services required at a given location and operates in cooperation with the other CKMS modules in the CKMS. The cryptographic operations required by the CKMS module are performed in cryptographic modules.
CKMS Security Policy	The security policy defined by a CKMS designer that describes all the key management capabilities and functions that are to be supported by that CKMS.
CKMS product	An implementation of a CKMS design that conforms to the requirements of [SP 800-130], provides a set of key management services and cryptographic functions, and operates in accordance with the CKMS designer's CKMS Security Policy.
CKMS Profile	A document that provides an implementation-independent specification of CKMS security requirements for use by a community of interest (e.g., U.S. Government, banking, health, and aerospace).
CKMS vendor	The entity that sells a CKMS product designed by the CKMS designer and subsequently implemented by the CKMS

	implementer.
Compatible security domains	Two Security Domains are compatible if they can exchange a key and its metadata without violating (or altering) either domain's security policy.
Compromise (noun)	The unauthorized disclosure, modification, substitution, or use of sensitive data (e.g., keys, metadata, or other security-related information) or the unauthorized modification of a security-related system, device or process in order to gain unauthorized access.
Compromise (verb)	To reduce the trust associated with a key, its metadata, a system, device or process.
Compromise recovery	The procedures and processes of restoring a system, device or process that has been compromised back to a secure or trusted state, including destroying compromised keys, replacing compromised keys (as needed), and verifying the secure state of the recovered system.
Compromised state	A lifecycle state for a key that is known or suspected of being known by an unauthorized entity.
Computer Security Policy	The high-level policy for the security services that are to be supported by a computer for protecting its applications, stored data, and communications, and the rules to be followed in verifying user identities and authorizing their requests before they are granted.
Confidentiality	The property that sensitive information is not disclosed to unauthorized entities.
Configurable	A characteristic of a system, component, or software that allows it to be changed by an entity authorized to select or reject specific capabilities to be included in an operational, configured version.
COTS product	A mass-produced product that is commercially available.
Cryptographic algorithm	A well-defined computational procedure that takes variable inputs, often including a cryptographic key, and produces an output.
Cryptographic module	The set of hardware, software, and/or firmware that implements security functions (including cryptographic algorithms), holds plaintext keys and uses them for performing cryptographic operations, and is contained within a cryptographic module boundary. This Profile requires the

	use of a cryptographic module as specified in [FIPS 140].
Cryptographic Module Security Policy	A specification of the security rules under which a cryptographic module is designed to operate.
Cryptographic module (compromised)	A cryptographic module that has been subjected to unauthorized access, modification, disclosure or the loss of any key and/or metadata that was contained in that module.
Cryptographic officer	An FCKMS role that is responsible for and authorized to initialize and manage all cryptographic services, functions, and keys of the FCKMS.
Cryptographic operation	The execution of a cryptographic algorithm. Cryptographic operations are performed in cryptographic modules.
Cryptoperiod	The time span during which a specific key is authorized for use or in which the keys for a given system or application may remain in effect.
Deactivated state	A lifecycle state of a key whereby the key is no longer to be used for applying cryptographic protection. Processing already protected information may still be performed.
Destroyed state	A lifecycle state of a key whereby the key is no longer available and cannot be reconstructed.
Digital signature	The result of a cryptographic transformation of data that, when properly implemented with a supporting infrastructure and policy, provides the services of: 1. Origin authentication, 2. Data integrity, and 3. Signer non-repudiation.
Domain authority	An FCKMS role that is responsible for defining and accepting a Domain Security Policy, and for subsequently deciding the conditions necessary for communicating with other security domains and assuring that those conditions are met.
Domain Security Policy	A single security policy that is supported and enforced by one or more FCKMSs and/or Federal organizations.
Downgrading	An authorized reduction in the level of protection to be provided to specified information, e.g., from a Moderate impact level down to a Low impact level.
Ease-of-use	A metric of satisfaction in using a product as established by one or more individuals using the product.
Entity	An individual (person), organization, device, or process.

Entity authentication	A process that provides assurance of an entity's identity.
Environmental testing	Evaluating the behavior of a device or system to obtain assurance that it will not be compromised by environmental conditions or fluctuations when operating outside the normal operating range.
Equivalent security domains	Two or more security domains that have security policies that have been determined to provide equivalent protection for the information.
Error-detection code	A code computed from data and comprised of redundant bits of information that have been designed to detect, but not correct, unintentional changes in the data.
Facility (mobile device)	The physical enclosure, case, or cover of a device containing any FCKMS component, plus the person to whom the device has been issued and is trusted to protect and use it properly.
Facility (static device)	The physical enclosure of a device containing any FCKMS component, typically a room or building that can be physically protected.
FCKMS	A Federal Cryptographic Key Management System that uses a CKMS product that is configured to operate in accordance with the FCKMS service-user's higher-level policies, and is operated in accordance with this Profile.
FCKMS architecture	The structure of an operational FCKMS, including descriptions and diagrams of the types and locations of all its FCKMS modules, components, devices, facilities, support utilities, and communications.
FCKMS documentation	The documentation collected or produced by the FCKMS service-providing organization (including the design documentation of the CKMS that will be the foundation of the FCKMS) that states what services and functions are to be provided to FCKMS service-using organizations.
FCKMS module	A logical process that performs all required FCKMS functions at a given location. Also see CKMS module.
FCKMS personnel	The individuals of an FCKMS service-providing organization that are authorized to assume the supported roles of the FCKMS.
FCKMS service provider (FCKMS service-providing	An entity that provides cryptographic key management services for one or more FCKMS service-using organizations.

organization)	
FCKMS service user (FCKMS service-using organization)	A Federal organization or contractor that has selected an FCKMS service provider to provide key management services.
FCKMS (compromised)	An FCKMS that has been subjected to unauthorized modification or to the disclosure or loss of any of its keys and/or sensitive metadata.
Federal Profile	The specifications for FCKMSs, including the requirements for their design, implementation, procurement, installation, configuration, management, operation, and use by Federal organizations and their contractors.
FCKMS Security Policy	The security policy defined by a FCKMS service provider and the FCKMS service user that specifies how the FCKMS will be operated.
FIPS 140 security level	A metric of the security provided by a cryptographic module that is specified as Level 1, 2, 3, or 4, as specified in [FIPS 140], where Level 1 is the lowest level, and Level 4 is the highest level.
Firewall	The process integrated with a computer operating system that detects and prevents undesirable applications and remote users from accessing or performing operations on a secure computer.
Framework	The CKMS requirements specified in [SP 800-130].
Functional testing	Testing that verifies that an implementation of some function operates correctly.
Hardening	A process to eliminate a means of attack by patching vulnerabilities and turning off nonessential services.
Hash function	An algorithm that computes a numerical value (called the hash value) on a data file or electronic message that is used to represent that file or message, and depends on the entire contents of the file or message. Can be considered to be a fingerprint of the file or message.
Identity authentication	See Entity authentication.
Impact level	Refers to the three broadly defined impact levels in [FIPS 200] that categorize the impact of a security breach as Low, Moderate or High.
Incremental testing	Testing a system or device to determine that changes have not

	affected its security and intended functionality.
Information Management Policy	The high-level policy of an organization that specifies what information is to be collected or created, and how it is to be managed.
Information Security Policy	A high-level policy of an organization that is created to support and enforce portions of the organization's Information Management Policy by specifying in more detail what information is to be protected from anticipated threats and how that protection is to be attained.
Integrity	A property whereby data has not been altered in an unauthorized manner since it was created, transmitted or stored.
Integrity authentication	A process that provides assurance of the integrity of communications sessions, messages, documents or stored data.
Integrity protection	A physical or cryptographic means of providing assurance that information has not been altered in an unauthorized manner since it was created, transmitted or stored.
Integrity verification	Obtaining assurance that information has not been altered in an unauthorized manner since it was created, transmitted or stored.
Key agreement	A key-establishment procedure where the resultant keying material is a function of information contributed by two or more participants, so that no entity can predetermine the resulting value of the keying material independently of any other entity's contribution.
Key confirmation	A procedure to provide assurance to one entity (the key-confirmation recipient) that another entity (the key-confirmation provider) actually possesses the correct secret keying material and/or shared secret.
Key custodian	An FCKMS role that is responsible for distributing keys or key splits and/or entering them into a cryptographic module.
Key derivation	The process of deriving a key in a non-reversible manner from shared information, some of which is secret.
Key distribution	See Key transport.
Key establishment	The process that results in the sharing of a key between two or more entities, either by transporting a key from one entity to another (key transport) or generating a key from information

	shared by the entities (key agreement).
Key format	The data structure of a cryptographic key.
Key life cycle	The period of time between the creation of the key and its destruction.
Key owner	A person authorized by an FCKMS service provider or service user to use a specific key that is managed by the FCKMS.
Key (plaintext)	A cryptographic key that is in a form that can be used in a cryptographic module to perform a cryptographic operation.
Key splitting	Dividing a key into two or more parts (i.e., key splits), such that the original key cannot be obtained without properly combining a sufficient number of the parts.
Key splitting (*n* of *k*)	Dividing a key into *n* parts, such that the original key cannot be obtained without having at least *k* of the parts, where $k < n$.
Key states	A categorization of the states that a key can assume during its lifetime. See [SP 800-57-Part 1].
Key transport	A manual or automated key-establishment procedure whereby one entity (the sender) selects and distributes the keying material to another entity (the receiver).
Key type	One of the twenty-one types of keys listed in [SP 800-130] and defined in [SP 800-57-Part 1].
Key update	A key-derivation process whereby the derived key replaces the key from which it was derived when the key-derivation process is later repeated.
Key wrapping	A method of encrypting keys using a symmetric key that provides both confidentiality and integrity protection.
Key/metadata recovery	The process of retrieving or reconstructing a key or metadata from backup or archive storage.
Key-recovery agent	An FCKMS role that assists in the key-recovery/metadata-recovery process.
Message Authentication Code (MAC)	A cryptographic checksum on data that uses a symmetric key to detect both accidental and intentional modifications of data.
Malware	Software designed and operated by an adversary to violate the security of a computer (includes spyware, virus programs, root kits, and Trojan horses).
Message authentication	A process that provides assurance of the integrity of messages, documents or stored data.

Metadata (explicit)	Parameters used to describe properties associated with a cryptographic key that are explicitly recorded, managed, and protected by the FCKMS.
Metadata (implicit)	Information about a cryptographic key that may be inferred (i.e., by context), but is not explicitly recorded.
Metadata (bound)	Metadata that has been cryptographically combined with the associated key to produce a MAC or digital signature that can be used to verify that the key and metadata are indeed associated with each other.
Metadata (compromised)	Sensitive metadata that has been disclosed to or modified by an unauthorized entity.
Multi-level security domain	A security domain that supports information protection at more than one impact level.
Operating system	A collection of software that manages computer hardware resources and provides common services for computer programs.
Operational storage	The normal storage for operational keys and associated metadata during the cryptoperiod of the keys.
Operator	An FCKMS role that is authorized to operate an FCKMS (e.g., initiate the FCKMS, monitor performance, and perform backups), as directed by the system administrator.
Parameter	A value that is used to control the operation of a cryptographic function or that is used by a cryptographic function to compute one or more outputs.
Penetration testing	Testing that verifies the extent to which a system, device or process resists active attempts to compromise its security.
Personal accountability	A policy that requires that every person who accesses sensitive information be held accountable for his or her actions.
Personnel-security compromise	The accidental or intentional action of any person that reduces the security of the FCKMS and/or compromises any of its keys and sensitive metadata.
Physical-security compromise	The accidental or intentional reduction of the physical protection of, or access controls to, FCKMS components, keys, metadata, and facilities.
Pre-activated state	A lifecycle state of a key in which the key has been created, but is not yet authorized for use.

Primary facility	An FCKMS facility that houses a primary system.
Primary system	An FCKMS module that is currently active. Contrast with Backup (system).
Private key	A cryptographic key used with a public-key cryptographic algorithm that is uniquely associated with an entity and is not made public.
Profile	See Federal Profile.
Profile augmentations	The properties or characteristics that are recommended for FCKMSs.
Profile features	The properties or characteristics that are suggested for FCKMSs.
Profile Requirements	The properties or characteristics that **shall** be exhibited in all FCKMSs in order to conform to, or comply with, this Profile.
Public key	A cryptographic key that is used with a public-key cryptographic algorithm, is uniquely associated with an entity and that may be made public.
Registration agent	An FCKMS role that is responsible for registering new entities and binding their key(s) to their identifiers and perhaps other selected information.
Revoked state	A lifecycle state of a key for which the use of that key has been terminated prior the end of the key's intended cryptoperiod.
Scalability testing	Testing the ability of a system to handle an increasing amount of work correctly.
Secret key	A cryptographic key that is used with a secret-key (symmetric) cryptographic algorithm, is uniquely associated with one or more entities and is not made public.
Security assessment	An evaluation of the security provided by a system, device or process.
Security strength	A number associated with the amount of work (that is, the base 2 logarithm of the minimum number of operations) that is required to cryptanalyze a cryptographic algorithm or system.
Security testing	Testing that attempts to verify that an implementation protects data and maintains functionality as intended.
Self testing	Testing within a system, device or process during normal

	operation to detect misbehavior.
Semantics	The intended meaning of acceptable sentences of a language.
Sentences, formal	The entire set of sentences that can be created or recognized as being valid using the formal syntax specifications of a formal language.
Source authentication	A process that provides assurance of the source of information.
Store a key or metadata	Placing a key and/or metadata in storage outside of a cryptographic module without retaining the original copy in a cryptographic module.
Support	To be capable of providing a service or perform a function that is required or desired; to agree with a policy or position; to fulfill requirements.
Suspended state	A lifecycle state of a key whereby the use of the key for applying cryptographic protection has been temporarily suspended.
Symmetric key	See Secret key.
Syntax	The rules for constructing or recognizing the acceptable sentences of a language.
System administrator	An FCKMS role that is responsible for the personnel, daily operation, training, maintenance, and related management of an FCKMS other than its keys. The system administrator is responsible for initially verifying individual identities, and then establishing appropriate identifiers for all personnel involved in the operation and use of the FCKMS.
System authority	An FCKMS role that is responsible to executive-level management (e.g., the Chief Information Officer) for the overall operation and security of an FCKMS. A system authority manages all operational FCKMS roles.
Third-party testing	Independent testing by an organization that was not involved in the design and implementation of the object being tested (e.g., a system or device) and is not intended as the eventual user of that object.
Trust	A characteristic of an entity that indicates its ability to perform certain functions or services correctly, fairly and impartially, along with assurance that the entity and its identifier are genuine.

Trust anchor	One or more trusted public keys that exist at the base of a tree of trust or as the strongest link in a chain of trust and upon which a Public Key Infrastructure is constructed.
Upgrading	An authorized increase in the level of protection to be provided to specified information, e.g., from a Low impact level to a Moderate impact level.
User	An FCKMS role that utilizes the key-management services offered by an FCKMS service provider.
User interface	The physical or logical means by which users interact with a system, device or process.
Validation	The process of determining that an object or process is acceptable according to a pre-defined set of tests and the results of those tests.